AC Servo System
TSTE Series
Simplified Manual

TECO ELECTRO DEVICES CO., LTD.

■Warning and Alert:

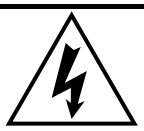

Warning

- **Do not proceed to the assembly of the line while electrifying.**
- **Circuit & change components between entering shutting down the power supply and stopping showing CHARGE LED light of the Servo driver.**
- **The output of Servo drive [U, V, W] must NOT touch the AC power.**

Alert

- **Install the fan if the temperature around is too high while the Servo driver is installed in the Control Board.**
- **Do not proceed to the Anti-Pressure-Test to the Servo driver.**
- **Confirm the quick stop function is available before operate servo drive.**
- **Matching up machine to change the user parameter setting before machine performs. If there is no according correct setting number, it could lead to out of control or breakdown.**
- **Before start operate this servo drive check the servo motor Cn030 setting, it will lead to error when CN30 without setting correctly.**

Safety proceeding:

Check the covering letter detail before installing, running, maintaining and examining. Furthermore, only the profession-qualified people can proceed to the line-assembly.

Safety proceeding in the covering letter discriminate between “Warning” & ”Alert”.

Alarm

Indicating the possibility dangerous situation. It could cause the death or serious damage if being ignored.

Warning

Indicating the possibility dangerous situation. It could cause smaller or lighter human injured and damage of equipment.

Read this covering letter detail before using Servo driver.

First of all, thank you for using TED Servo Driver TSTE Series (“TSTE” for short) and Servo Motors. TSTE can be controlled by digital board or PC, and provide excellent performance for a wide range of applications and different requirement from customers.

Read this covering letter before using TSTE. Contents of the letter comprises:

- **Servo System checking, installing and procedure of assembly line.**
- **Controller procedure for digital board, status displaying, unusual alarm and strategy explanation.**
- **Servo System control function, running testing and procedures adjusted.**
- **Explanation for all parameter of Servo Driver.**
- **Standard specification of TSTE Series.**

In order to daily examine, maintain and understand the reason of unusual situation and handle strategy, please put this covering letter in safe place to read it anytime.

P.S: The end user should own this covering letter, in order to make the Servo Driver bring the best performance.

Contents

Chapter 1 Checking and Installing

1-1 Checking Products 1-1
1-1-1 Confirming with Servo Drives 1-1
1-1-2 Confirming with Servomotors 1-2
1-1-3 Servo Motor Model Code Display 1-2
1-2 Surface and Panel Board 1-4
1-3 A Brief Introduction of Operation for Drives 1-5
1-4 Conditions for Installation of Drives 1-6
1-4-1 Environmental Conditions 1-6
1-4-2 Direction and Distance 1-6
1-5 Conditions for Installation of Servomotors 1-7
1-5-1 Environmental Conditions 1-7
1-5-2 Method of Installation 1-7
1-5-3 Notice for in stall motor 1-8

Chapter 2 Wiring

2-1 Basic Wiring for Servo System 2-1
2-1-1 Wiring for Main Circuit and Peripheral Devices 2-1
2-1-2 Wiring for Servo Drives 2-2
2-1-3 Specifications of Wiring 2-3
2-1-4 Motor Terminal Layout 2-4
2-1-5 Typical Wiring for Motor and Main Circuit 2-6
2-1-6 TB Terminal 2-7
2-1-7 Wiring for Mechanical Brake 2-7
2-2 I/O Terminal 2-8
2-2-1 CN1 Input and Output terminals 2-9
2-2-2 Encoder Connector (CN2) Terminal Layout 2-20
2-2-3 Encoder Connector (CN3/CN4) Terminal Layout 2-22
2-3 Typical Circuit Wiring Examples 2-23
2-3-1 Position Control Mode (Pe Mode) (Line Driver) 2-23
2-3-2 Position Control Mode (Pe Mode) (Open Collector) 2-24
2-3-3 Position Control Mode (Pi Mode) 2-25
2-3-4 Speed Control Mode (S Mode) 2-26
2-3-5 Torque Control Mode (T Mode) 2-27

Chapter 3 Panel Operator / Digital Operator

3-1 Panel Operator on the Drives 3-1
3-2 Signal Display 3-8
3-2-1 Status Display 3-8
3-2-2 Diagnostic function 3-9

Chapter 4 Trial Operation

4-1 Trial Operation Servo motor without Load 4-2
4-2 Trial Operation for Servomotor without Load from Host Reference 4-5

4-3 Trial Operation with the Servomotor Connected to the Machine 4-8

Chapter 5 Control Functions

5-1 Control Mode Selection 5-1
5-2 Torque Mode 5-2
5-2-1 Analog Torque command Ratio 5-3
5-2-2 Adjusting the analog torque command Offset 5-4
5-2-3 Torque command linear acceleration and deceleration 5-5
5-2-4 Definition of torque direction 5-6
5-2-5 Internal Torque Limit 5-7
5-2-6 Limiting Servomotor Speed during Torque Control 5-7
5-2-7 Additional Torque Control Functions 5-9
5-3 Speed Mode 5-10
5-3-1 Selection for speed command 5-11
5-3-2 Analog speed command Ratio 5-12
5-3-3 Adjusting the analog reference offset 5-12
5-3-4 Analog reference for speed command limit 5-13
5-3-5 Encoder Signal Output 5-13
5-3-6 Smoothing the speed command 5-15
5-3-7 Setting rotation direction 5-18
5-3-8 Speed Loop Gain 5-19
5-3-9 Notch Filter 5-20
5-3-10 Torque Limit of speed control mode 5-22
5-3-11 Gain Switched 5-23
5-3-12 Other Functions 5-30
5-4 Position Mode 5-32
5-4-1 External Pulse Command 5-33
5-4-2 Internal Position Command 5-35
5-4-3 Electronic Gear 5-38
5-4-4 Smooth Acceleration 5-42
5-4-5 Definition of Direction 5-43
5-4-6 Gain Adjustment 5-43
5-4-7 Clear the Pulse Offset 5-44
5-4-8 Original Home 5-45
5-4-9 Other Position Function 5-53
5-5 Gain Adjustment 5-54
5-5-1 Automatic Adjusting 5-57
5-5-2 Manual Adjusting 5-60
5-5-3 Improving Resonance 5-61
5-6 Other Functions 5-62
5-6-1 Programmable I/O Functions 5-62
5-6-2 Switching for the Control Mode 5-64
5-6-3 Auxiliary Functions 5-64
5-6-4 Brake Mode 5-65

5-6-5 Timing Diagram of Mechanical Brake 5-65
5-6-6 CW/CCW Drive Inhibit Function 5-67
5-6-7 Selecting for External Regeneration Resistor 5-68
5-6-8 Fan Setting 5-71
5-6-9 Factory setting parameter 5-71

Chapter 6 Parameter
6-1 Explanation of Parameter Groups 6-1
6-2 Parameter Display Table 6-1

Chapter 7 Communications Function
7-1 Communications function (RS232 & RS485) 7-1
7-1-1 Communication wiring 7-1
7-1-2 RS232, RS-485 communication parameter 7-3
7-1-3 Rs-232 communication protocol and format 7-5
7-1-4 Modbus communication protocol for RS-485 7-8
7-2 Communication Address table 7-19

Chapter 8 Troubleshooting
8-1 Alarm Functions 8-1
8-2 Troubleshooting of Alarm and Warning 8-3

Chapter 9 Specifications
9-1 Specifications and Dimension for Servo Drives 9-1
9-2 Specifications and Dimension for Servomotors 9-7

Appendix A - Peripheral for Servo motors App-1

Chapter 1 Checking and Installing

1-1 Checking Products

Our Servo Pack have already completely been functionally examined before leaving the factory. In order to protect the products from the damage during transportation, please check the items below before sealing off the pack:

- Check if the models of servo driver and motor are the same with the models of ordering.
  (About the model explanation, please check the chapters below)
- Check if there are damage or scrape out side of the servo driver and motor.
  (If there is any damage during transportation, do not power ON)
- Check if there are any bad assembly or slipped component in the Servo Drive and Motor
- Check if the Motor's rotor and shaft can be rotated smoothly by hand
  (The Servo Motor with Mechanical-Brake can not be rotated directly)
- There must be the "QC"-seal in each servo drive, if not, please do not proceed Power ON.

If there is any bug or irregular under the situation above, please contact TED Local sales representative or distributor instantly.

1-1-1 Confirming with Servo Drives

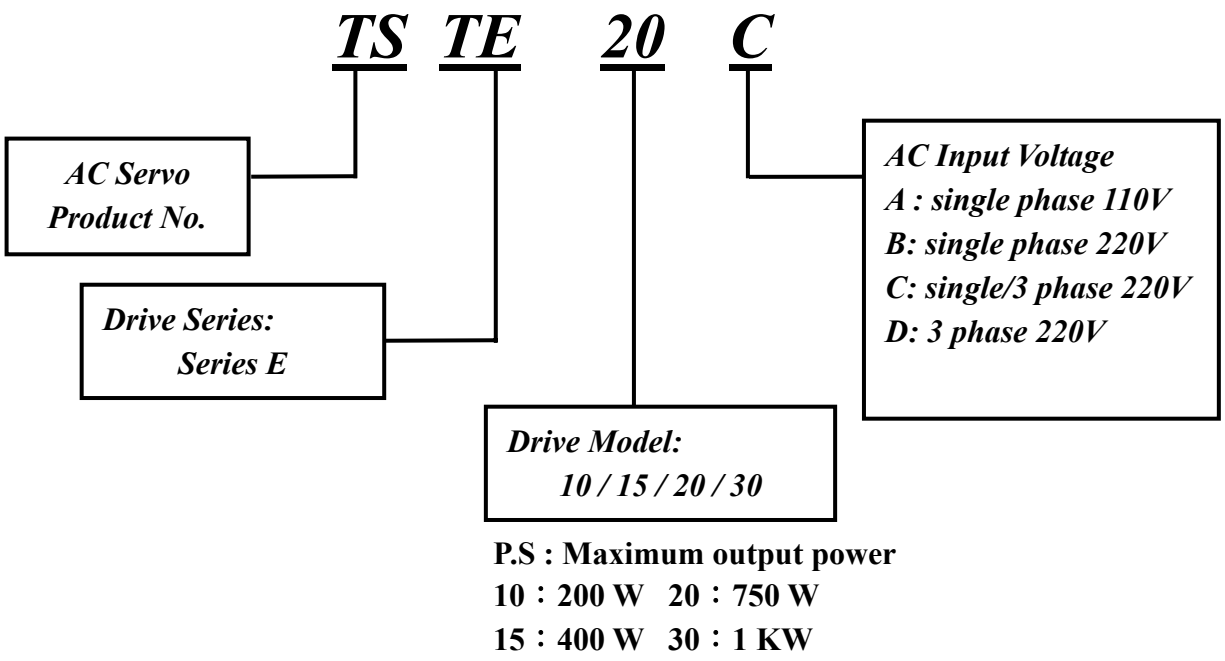

P.S : Maximum output power
10：200 W 20：750 W
15：400 W 30：1 KW

1-1-2 Confirming with Servo Motors

TS Series:

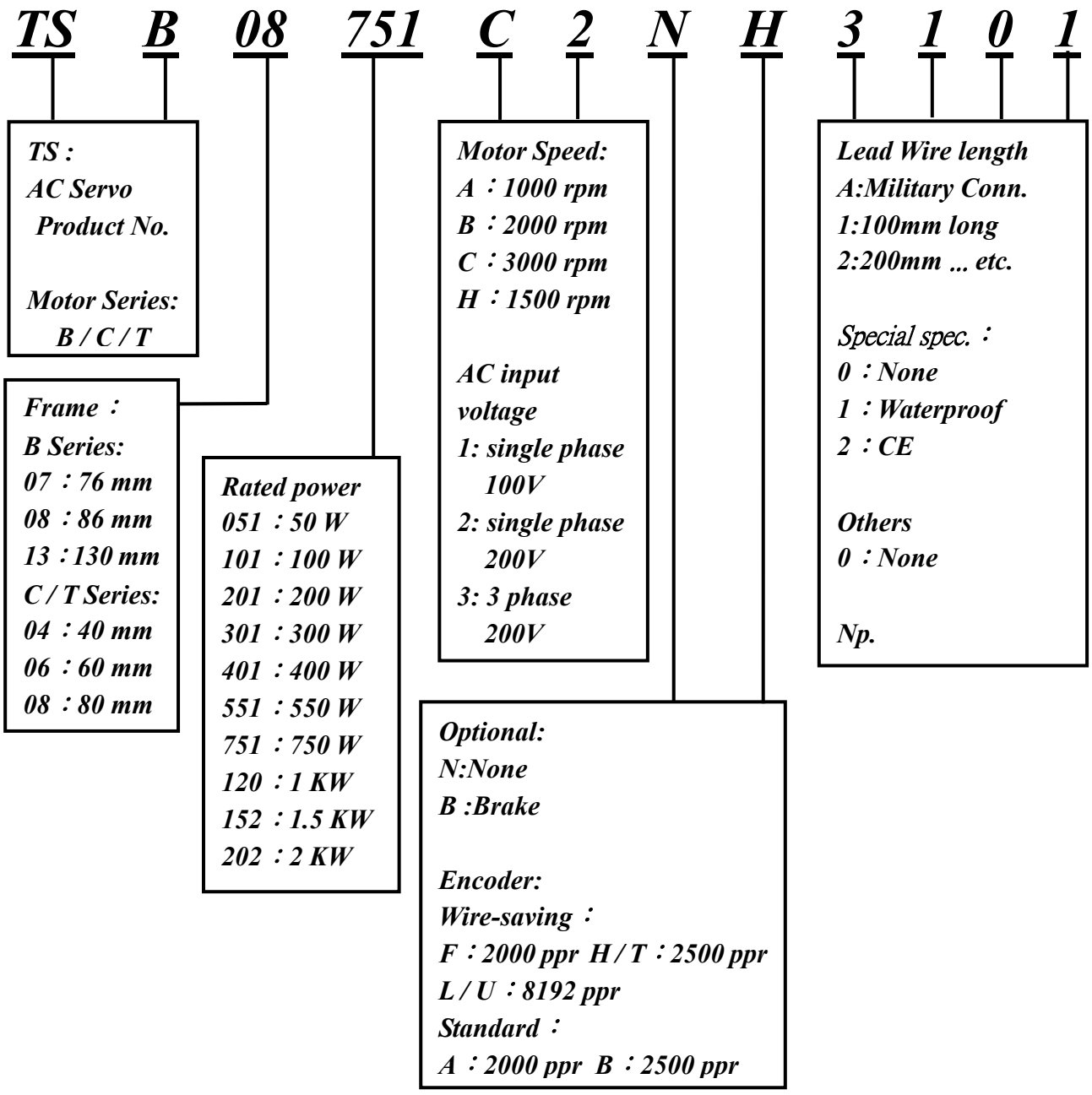

CB、CC、MB Series :

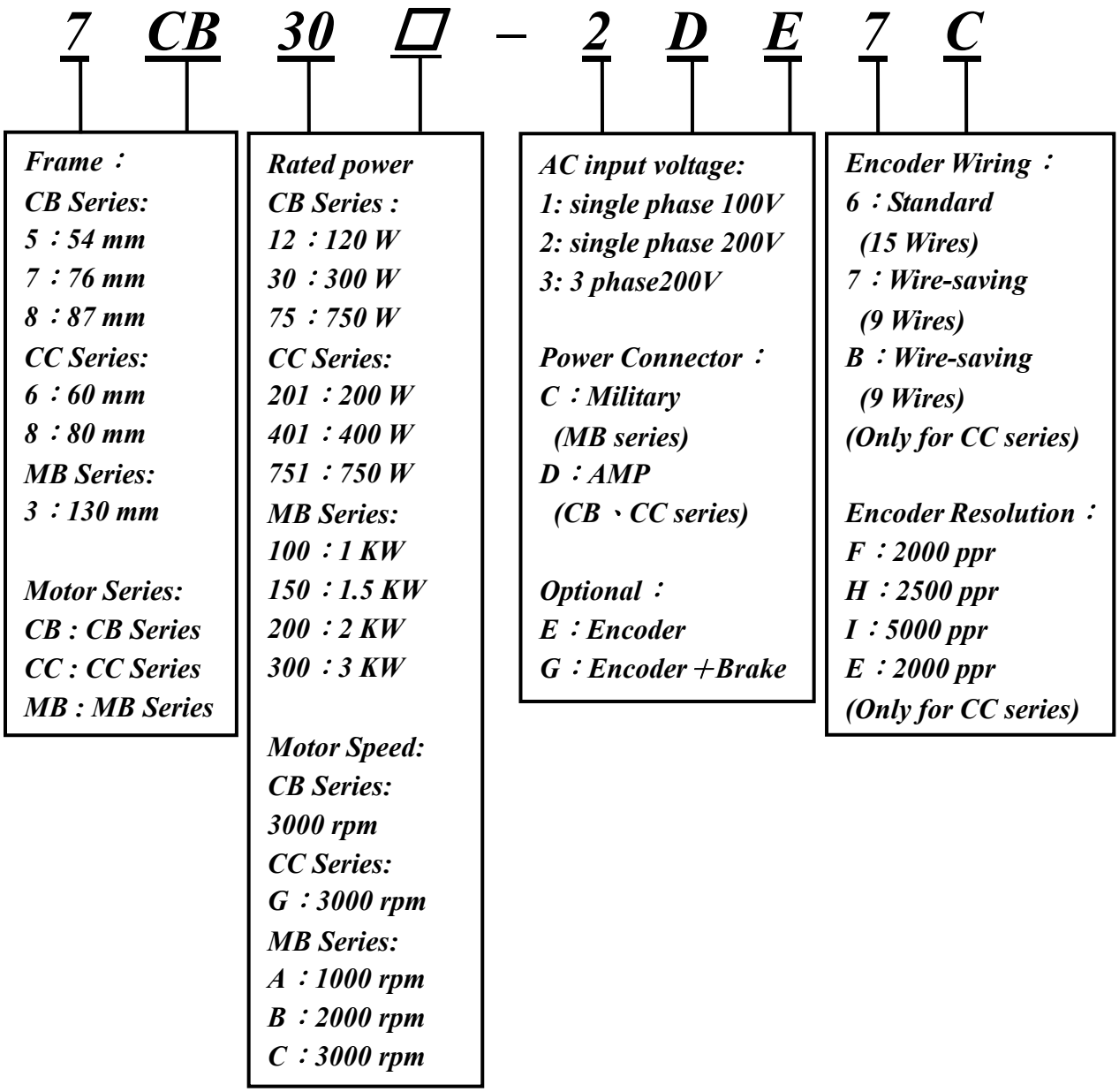

1-1-3 Servo Motor Model Code Display

Warning

Make sure parameter CN030 is setting correctly before start operate this drive.

Setting method reference 1-1-3 .

Use dn-08 to display servo motor code and check the servo drive and motor compatibility according to the table below.
If the dn08 preset is not according to the list below then contact your supplier.
The motor model code is stored in parameter Cn30.

dn-08 Display Cn030 Setting 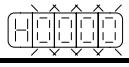	Drive Model	Motor Model	Motor Standards		Encoder Specification
			Watt (W)	Speed (rpm)	
H0000	TSTE10	5CB12	120	3000	2500
H1011		TSC04051	50	3000	2500
H1021		TSC04101	100	3000	2500
H0030		6CC201	200	3000	2000
H1043		TST06201			2500
H0120	TSTE15	7CB30	300	3000	2000
H0121		TSB07301			2500
H0130		6CC201	200	3000	2000
H1133		TST06201			2500
H0140		6CC401	400	3000	2000
H1141		TSC06401			2500
H1143		TST06401			2500
H0210	TSTE20	8CB75	750	3000	2000
H0211		TSB08751			2500
H0220		6CC401	400	3000	2000
H1221		TSC06401			2500
H1223		TST06401			2500
H0230		8CC751	750	3000	2000
H1233		TST08751			2500
H0240		3MB055A	550	1000	2000
H0241		TSB13551A			2500
H0250		3MB055H		1500	2000
H0251		TSB13551H			2500
H0310	TSTE30	8CC751	750	3000	2000
H1313		TST08751			2500
H0320		3MB100A	1000	1000	2000
H0321		TSB13102A			2500
H0330		3MB100B		2000	2000
H0331		TSB13102B			2500
H0340		3MB100H		1500	2000
H0341		TSB13102H			2500
H0351		TSB13102C		3000	2500

1-2 Surface and Panel Board

TSTE-10 / TSTE-15

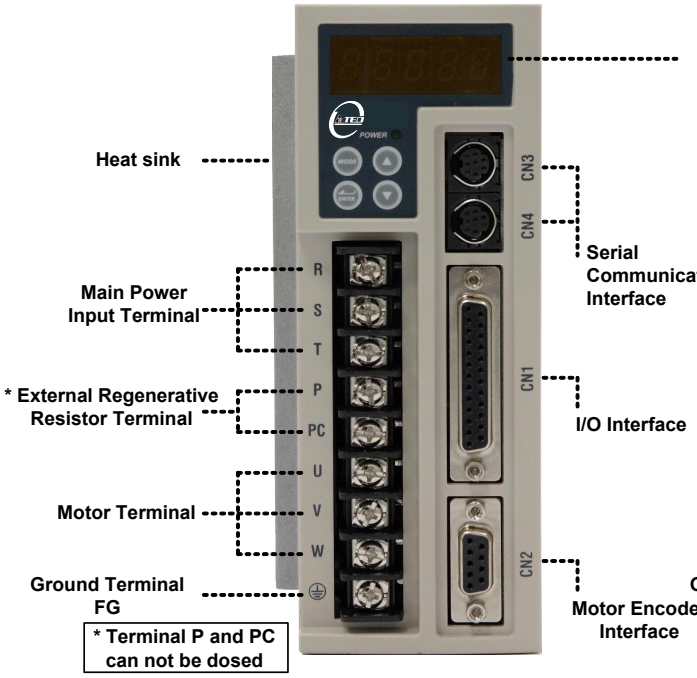

TSTE-20 / TSTE-30

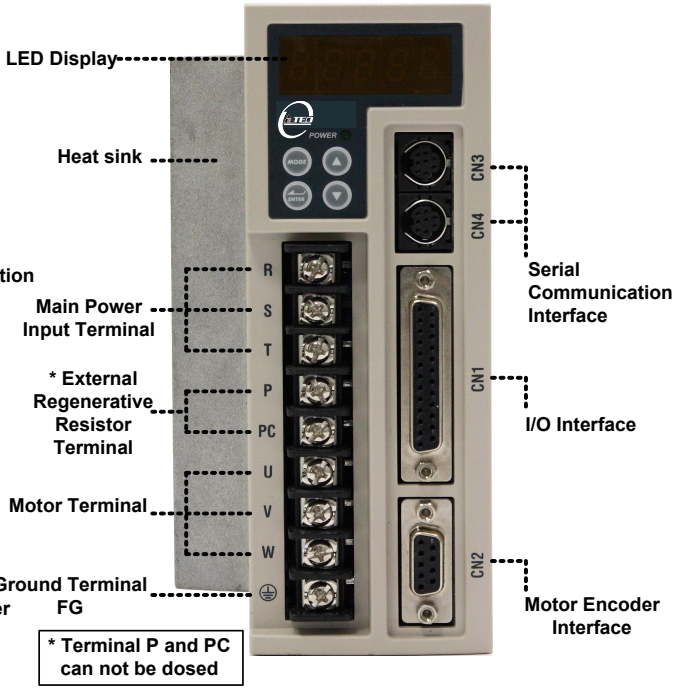

Key Board

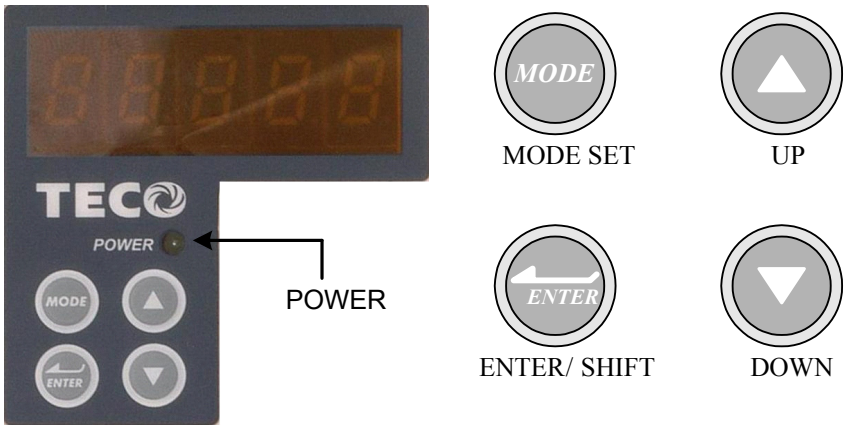

1-3 A Brief Introduction of Operation for Drives

There are many kinds of control-mode. The detail modes display as fellow:

Name		Mode	Explanation
Single Mode	Position Mode (External Pulse Command)	Pe	Position control for the servo motor is achieved via an external pulse command. Position command is input from CN1.
	Position Mode (Internal Position Command)	Pi	Position control for the servo motor is achieved via by 16 commands stored within the servo controller. Execution of the 16 positions is via Digital Input signals.
	Speed Mode	S	Speed control for the servo motor can be achieved via parameters set within the controller or from an external analog -10 ~ +10 Vdc command. Control of the internal speed parameters is via the Digital Inputs. A maximum of three steps speed can be stored internally.
	Torque Mode	T	Torque control for the servo motor can be achieved via parameters set or from an external analog -10 ~ +10 Vdc command.
Multiple Mode		Pe-S	Pe and S can be switched by digital-input-contact-point.
		Pe-T	Pe and T can be switched by digital-input-contact-point.
		S-T	S and T can be switched by digital-input-contact-point.

1-4 Conditions for Installation of Drives

1-4-1 Environmental Conditions

The product should be kept in the shipping carton before installation. In order to retain the warranty coverage, the AC drive should be stored properly when it is not to be used for an extended period of time. Some storage suggestions are:

- Ambient Temperature: 0 ~ + 55 deg C. Ambient Humidity: Under 85% RH (Under the condition of no frost).
- Stored Temperature: - 20 ~ + 85 deg C. Stored Humidity: Under 85%RH (Under the condition of no frost).
- Vibrating: Under 0.5 G.
- Do not mount the servo drive or motor in a location where temperatures and humidity will exceed specification.
- To avoid the insolation.
- To avoid the erosion of grease and salt.
- To avoid the corrosive gases and liquids.
- To avoid the invading of airborne dust or metallic particles.
- When over 1 Drives are installed in control panel, enough space have to be kept to get enough air to prevent the heat, the fan also must be installed, to keep the ambient temperature under 55 deg C.
- Please Install the drive in a vertical position, face to the front, in order to prevent the heat.
- To avoid the metal parts or other unnecessary things falling into the drive when installing.
- The drive must be stable by M5 screws.
- When there were the vibrating items nearby, please using vibration-absorber or installing anti-vibration- rubber, if the vibration can not be avoided.
- When there is any big-size magnetic switch, welding machines or other source of interference. Please install the filter. When the filter is installed, we must install the insulation transformer.

1-4-2 Direction and Distance

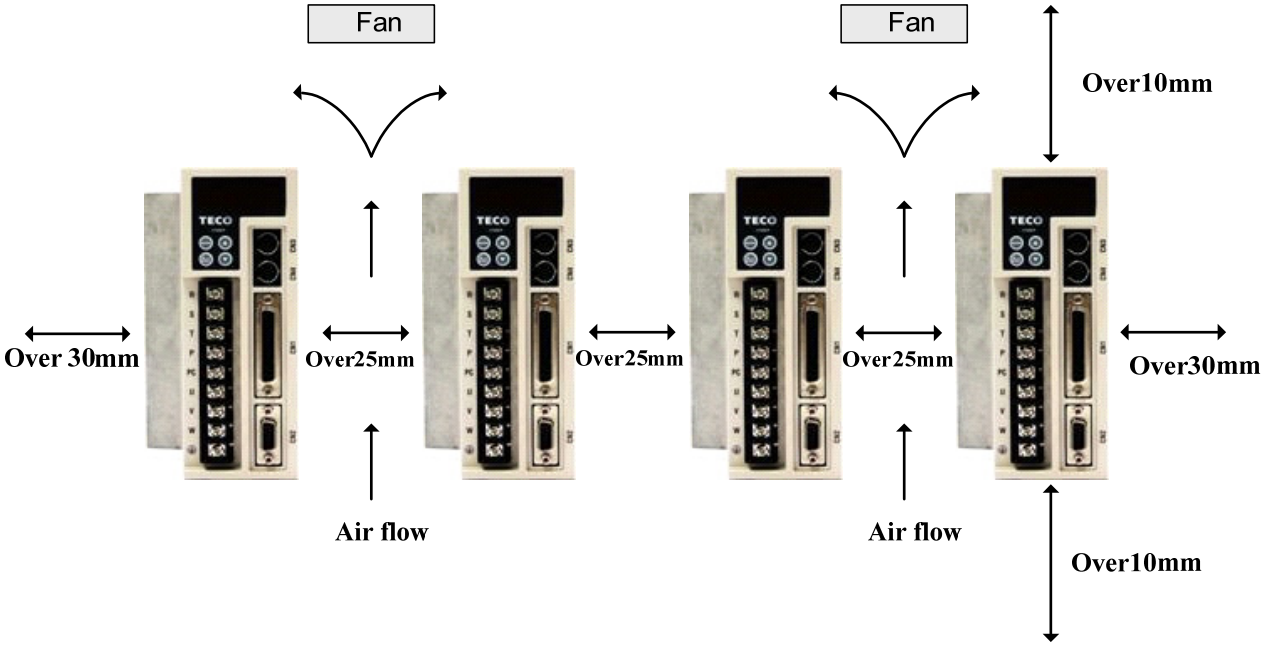

1-5 Conditions for Installation of Servo Motors

1-5-1 Environmental Conditions

- Ambient Temperature: 0 ~ + 40 deg C. Ambient humidity: Under 90% RH (No Frost).
- Storage Temperature: - 20 ~ + 60 deg C. Storage temperature: Under 90%RH (No Frost).
- Vibration: Under 2.5 G.
- In a well-ventilated and low humidity and dust location.
- Do not store in a place subjected to corrosive gases, liquids, or airborne dust or metallic particles.
- Do not mount the servo motor in a location where temperatures and humidity will exceed specification.
- Do not mount the motor in a location where it will be subjected to high levels of electromagnetic radiation.

1-5-2 Method of Installation

1. Horizontal Install: Please let the cable-cavity downside to prevent the water or oil or other liquid flow into the servo motor.

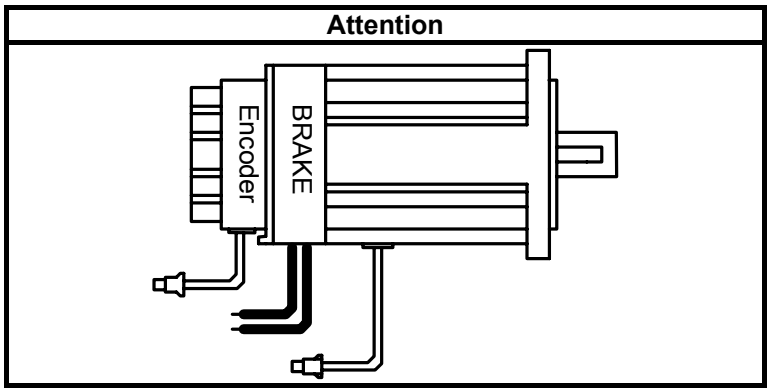

2. Vertical Install: If the motor shaft is side-up installed and mounted to a gear box, please pay attention to and avoid the oil leakage from the gear box.

1-5-3 Notice for install motor

1. Please using oil-seal-motor to avoid the oil from reduction gear flowing into the motor through the motor shaft.

2. The cable need to be kept dry.

3. Please fixing the wiring cable certainly, to avoid the cable ablating or breaking.

4. The extending length of the shaft shall be enough, otherwise there will be the vibration from motor operating.

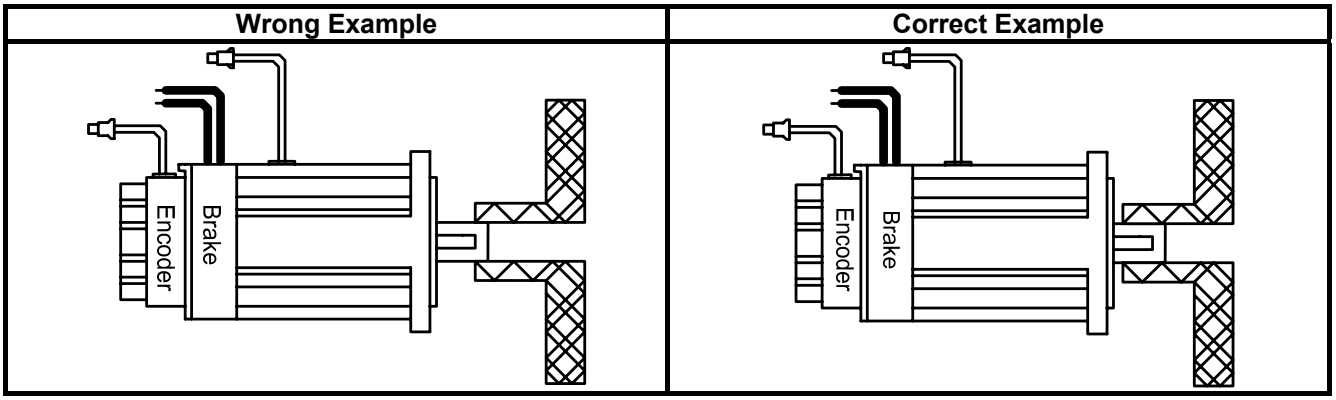

5. Please do not beat the motor when installing or taking it apart. Otherwise the shaft and the encoder of backside will be damaged.

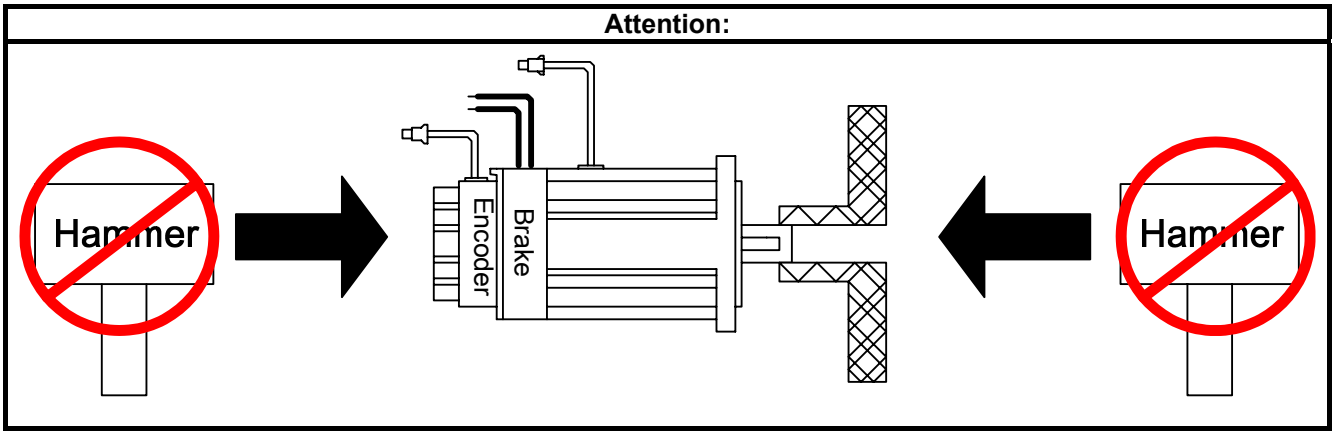

Chapter 2 Wiring

2-1 Basic Wiring for Servo System

2-1-1 Wiring for Main Circuit and Peripheral Devices

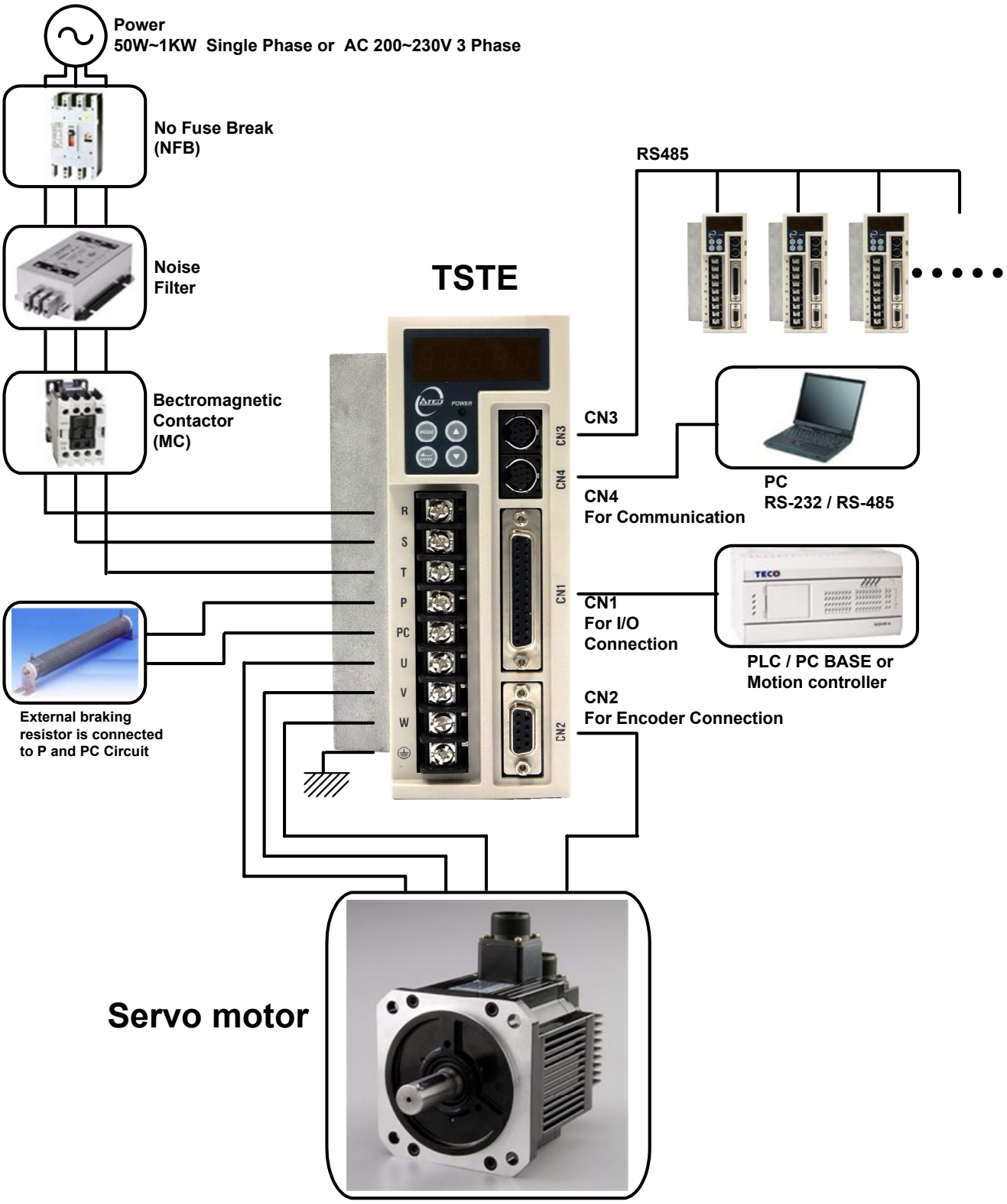

2-1-2 Wiring for Servo Drives

- The wire material must go by “Wiring Specifications.”
- Wiring Length: Command Input Wire: Less than 3m.

  Encoder Input Wire: Less than 20m.

  The Wiring goes by the shortest length.
- Please wire according to the standard wiring schema. Don’t connect if no using.
- Motor output terminal (U,V,W) must be connected correctly. Otherwise the servo motor will abnormally function.
- Shielded cable must be connected to FG terminal.
- Don’t install the capacitor or Noise Filter at the output terminal of servo drive.
- At the control-output-signal relay, the direction of surge absorb diode must be correctly connected, otherwise it can not output signal, and cause the protect loop of emergency-stop abnormal.
- Please do these below to avoid the wrong operation from noise:

  Please install devices such as the insulated transformer and noise filter at the input power.

  Keep more than 30 cm between Power wire (power cable or motor cable…etc.) and signal cable, do not install them in the same conduit.
- Please set “emergency-stop switch” to prevent abnormal operation.
- After wiring, check the connection-situation of each joint (ex: loose soldering, soldering point short, terminal order incorrect…etc.). Tighten the joints to confirm if surly connected to the servo drive, if the screw is tight. There can not be the situations such as cable break, cable pulled and dragged, or be heavily pressed.

  * Especially pay attention to the polarity between servo motor wiring and encoder.
- There is no necessary to add extra regeneration resistance under general situation. If there is any need or problem, please connect to distributor or manufacturer.

2-1-3 Specifications of Wiring

Connection Terminal			Servo Drives and Wire Specifications			
Connection Terminal	**Mark (Sign)**	**Name of Connect Terminal**	**TSTE-10**	**TSTE -15**	**TSTE -20**	**TSTE -30**
TB Terminal	R, S, T	Main Power Terminal	2.0mm ² A.W.G.14	2.0mm ² A.W.G.14	2.0mm ² A.W.G.14	2.0mm ² A.W.G.14
	U, V, W	Motor Terminal	2.0mm ² A.W.G.14	2.0mm ² A.W.G.14	2.0mm ² A.W.G.14	2.0mm ² A.W.G.14
	P, Pc	Regeneration Resistor Terminal	2.0mm ² A.W.G.14	2.0mm ² A.W.G.14	2.0mm ² A.W.G.14	2.0mm ² A.W.G.14
	⏚	Ground	2.0mm ² A.W.G.14	2.0mm ² A.W.G.14	2.0mm ² A.W.G.14	2.0mm ² A.W.G.14
Connect Terminal	**Connect Point No.**	**Connect Point Name**	**TSTE -10**	**TSTE -15**	**TSTE -20**	**TSTE -30**
CN1 Joint Control Signal	12,25	Analog command input (SIN, PIC)	0.2mm ² or 0.3mm ² , Twisted-pair-cable connecting to the Analog Grounding wire (including shield cable)			
	13	Analog Ground Terminal(AG)				
	1~3 14~16	Digital input Terminal(DI)	0.2mm ² or 0.3mm ² , Twisted-pair-cable connecting to the I/O Grounding wire (including shield cable)			
	18~20	Digital output terminal(DO)				
	8	Output 24V (IP24)				
	17	Input 24V (DICOM)				
	24	Digital Ground terminal(IG24)				
	4~7	Position Command Input (Pulse, Sign)	0.2mm ² or 0.3mm ², Twisted-pair-cable (including shield cable)			
	9~11 21~23	Encoder Signal Output (PA, /PA, PB, /PB, PZ, /PZ)				
CN2 Joint of encoder	5	Output 5V (+5E)	0.2mm ² or 0.3mm ² , Twisted-pair-cable (including shield cable)			
	4	Output Grounding wire of power supply (GND)				
	1~3 7~9	Encoder Signal Input (A, /A, B, /B, Z, /Z)				
CN3 Joint of Communication	5,7	RS-485 Communication	0.2mm ² or 0.3mm ² , Twisted-pair-cable (including shield cable)			
CN4 Joint of Communication	1,4	RS-232 Communication				
	3	Communication grounding				
	5,7	RS-485 Communication				

P.S.: 1. Select a proper capacity for NFB and noise filter when several Servo drives is connected.
2. CN1 is 25 Pins D-SUB connector, CN2 is 9 Pins D-SUB connector
3. CN3, CN4 are 8 Pins MINI DIN JACK.

2-1-4 Motor Terminal Layout

A Table of Motor-Terminal Wiring

(1) General Joint:

Terminal Symbol	Cable Color	Signal
1	Red	U
2	White	V
3	Black	W
4	Green	FG
Brake control wire	Fine red	DC +24V
	Fine yellow	0V

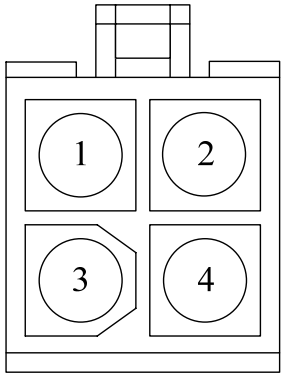

(2)Military Specifications Joint (No Brake):

Terminal	Cable Color	Signal
A	Red	U
B	White	V
C	Black	W
D	Green	FG

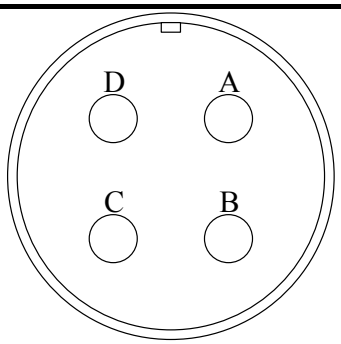

(3)Military Specifications Joint(Brake):

Terminal	Cable Color	Signal	
B	Red	U	
G	White	V	
E	Black	W	
C	Green	FG	
A	Fine red	BK control wire	DC +24V
F	Fine yellow		0V

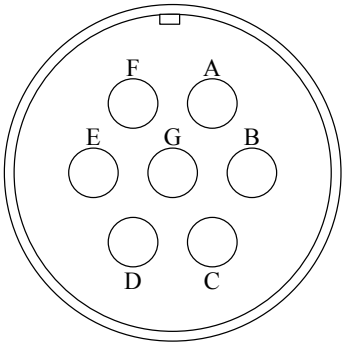

P.S.: The military joint with BK of servo motor has 9 Pins; and the encoder joint has also 9 Pins. Please confirm before wiring.

Table of Motor-Encoder Wiring

(1)General Joint:

Terminal Symbol	Cable Color	Signal
1	White	+5V
2	Black	0V
3	Green	A
4	Blue	/A
5	Red	B
6	Purple	/B
7	Yellow	Z
8	Orange	/Z
9	Shield	FG

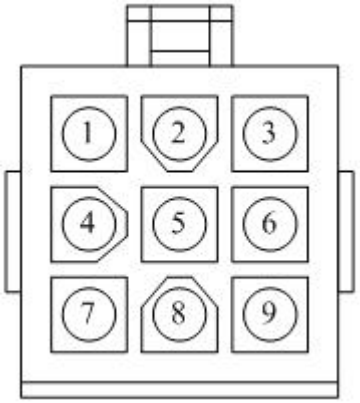

(2) Military Specifications Joint

Terminal Symbol	Cable Color	Signal
B	White	+5V
I	Black	0V
A	Green	A
C	Blue	/A
H	Red	B
D	Purple	/B
G	Yellow	Z
E	Orange	/Z
F	Shield	FG

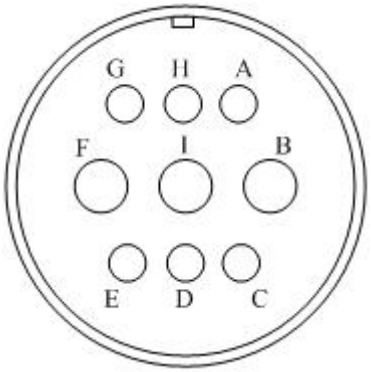

2-1-5 Typical Wiring for Motor and Main Circuit

*** The Wiring Example of Single Phase Main Power (Less than 1KW)**

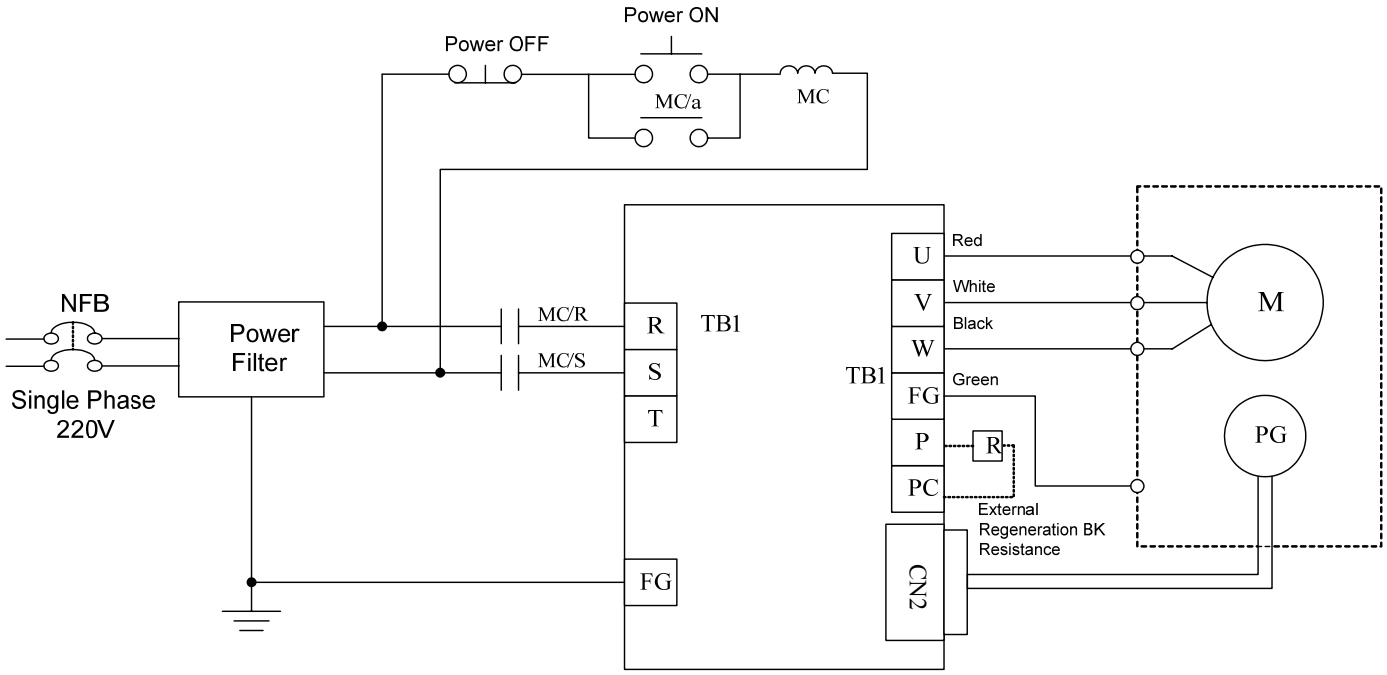

*** The Wiring Example of 3 Phase Main Power (More than 1KW)**

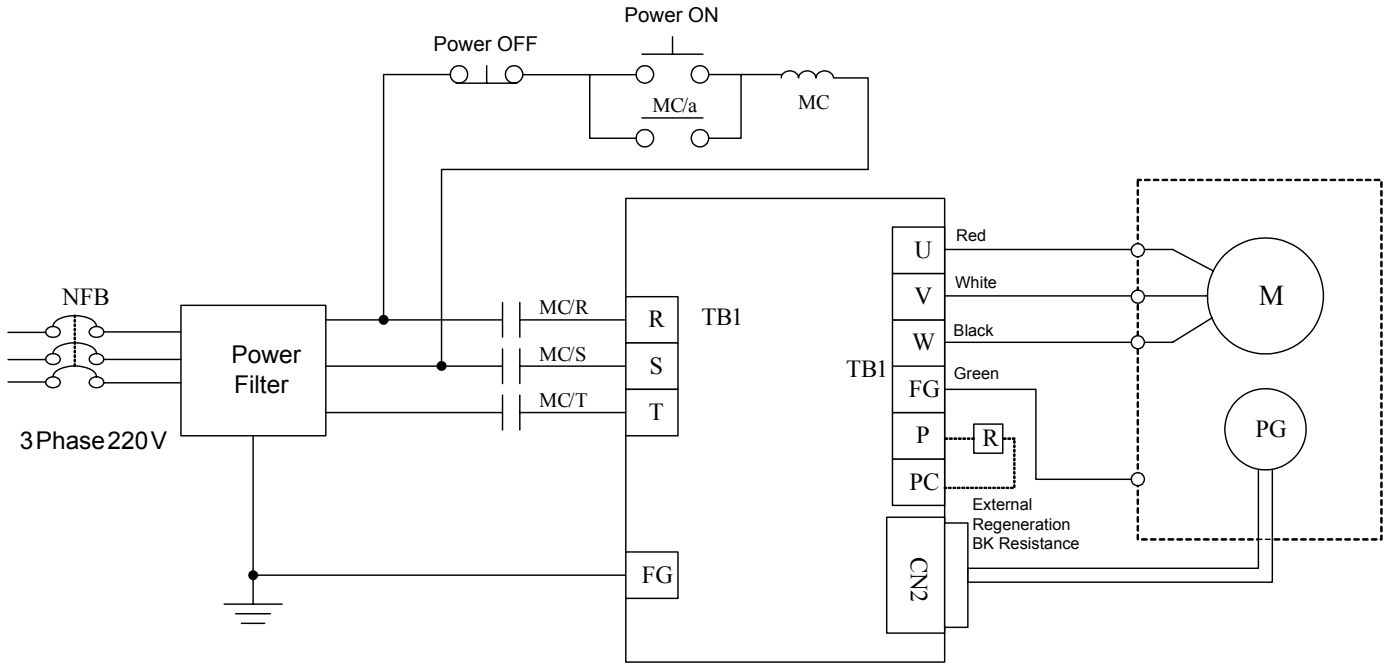

2-1-6 TB Terminal

Name	Terminal Sign	Detail
Main circuit power input terminal	R	Connecting to external AC Power. Single / 3 Phase 200~230VAC +10 ~ -15% 50/60Hz ±5%
	S	
	T	
External regeneration resistance terminal	P	When using external regeneration, set the resistance power in Cn012. Please refer to manual to see resistance value
	PC	
Motor-power output terminal	U	Motor terminal wire is **red**
	V	Motor terminal wire is **white**
	W	Motor terminal wire is **black**
Motor-case grounding terminal	⏚	Motor terminal wire is **green or yellow-green.**

2-1-7 Wiring for Mechanical Brake

Uninstall BRAKE:

- 50/100/200/300/400/750W series: Use Red wire and yellow wire connecting to DC +24V voltage**(No polarity)**
- 550/1KW series: BK outputs from A & F of **Motor Power Joint**, servo motor can operate normally after uninstalling.

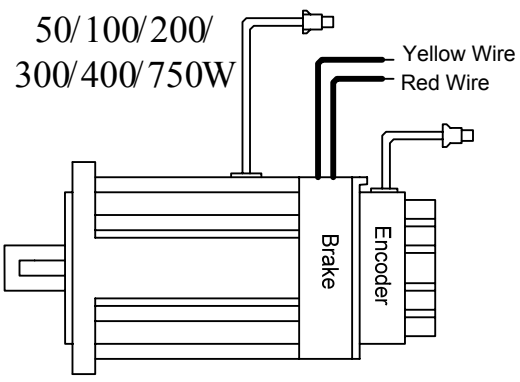

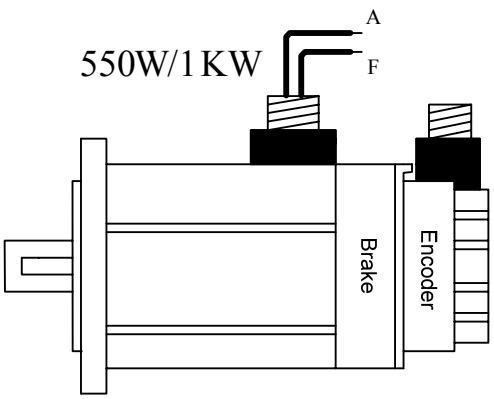

2-2 I/O Terminal

There are 4 groups of terminal, which contain CN3 and CN4 communication terminal, CN1 control I/O signal terminal and CN2 encoder terminal. The diagram below displays all positions for the terminal.

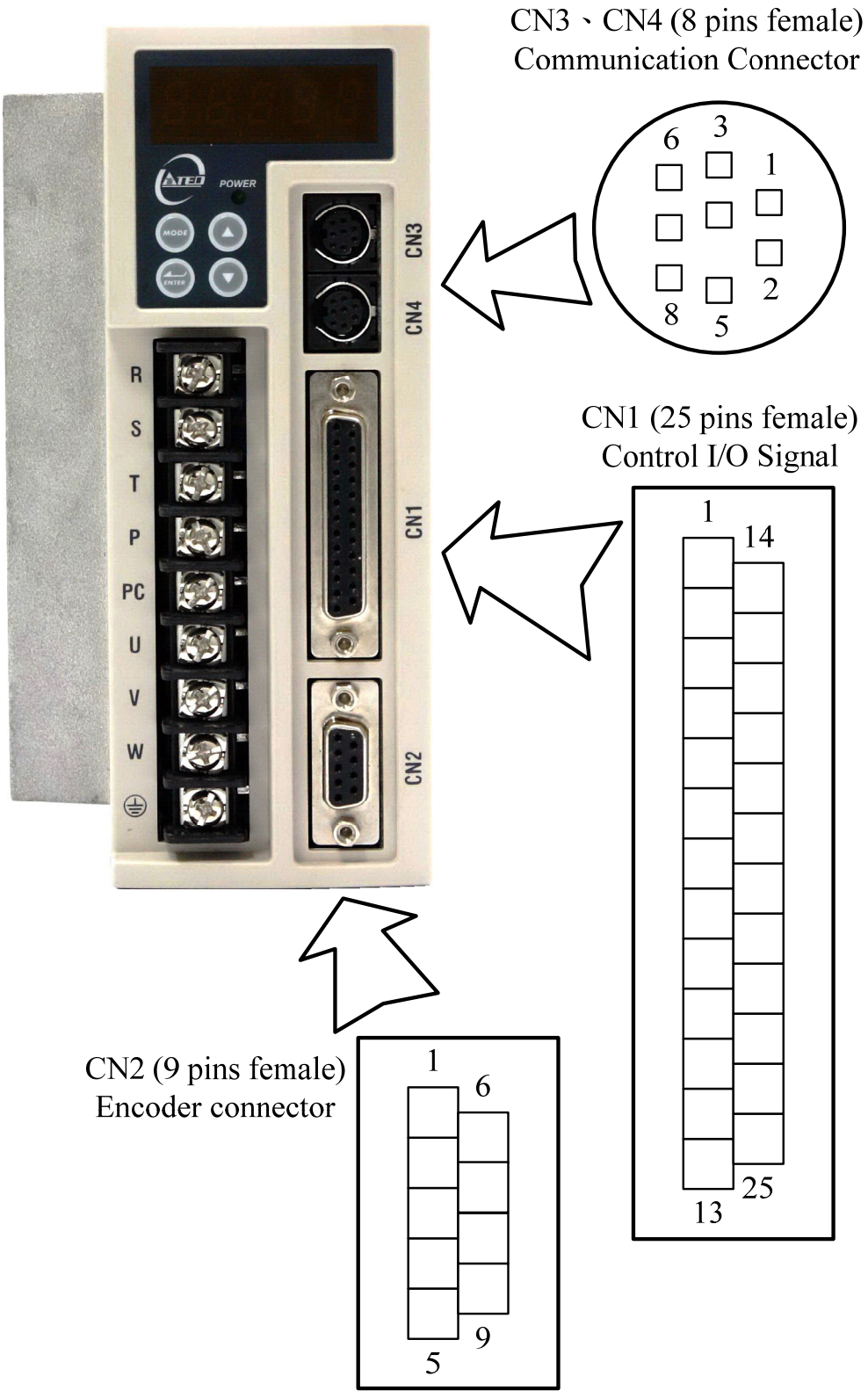

2-2-1 CN1 Input and Output terminals

(1) CN1 Terminal Layout:

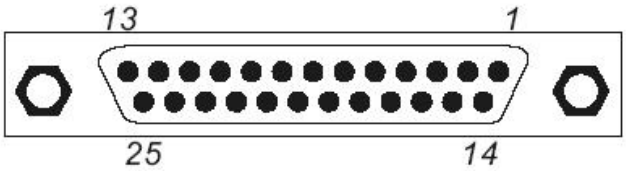

Pin No.	Name	Function
1	DI-1	Digital Input Terminal 1
2	DI-3	Digital Input Terminal 3
3	DI-5	Digital Input Terminal 5
4	Pulse	Pulse Command Input (+)
5	/Pulse	Pulse Command Input (-)
6	Sign	Position Symbol Command Input (+)
7	/Sign	Position Symbol Command Input (-)
8	IP24	+24V Power Output
9	/PA	Encoder output /A Phase
10	/PB	Encoder output /B Phase
11	/PZ	Encoder output /Z Phase
12	SIN	Speed or Torque analog command input
13	AG	Analog Signal Ground

Pin No.	Name	Function
14	DI-2	Digital Input Terminal 2
15	DI-4	Digital Input Terminal 4
16	DI-6	Digital Input Terminal 6
17	DICOM	Digital input common
18	DO-1	Digital output Terminal 1
19	DO-2	Digital output Terminal 2
20	DO-3	Digital output Terminal 3
21	PA	Encoder output A Phase
22	PB	Encoder output B Phase
23	PZ	Encoder output Z Phase
24	IG24	+24V PW ground terminal
25	PIC	Torque command speed limited

P.S.

1. Digital input and Digital output is programmable, setting method refer to parameter Hn501 ~ Hn 509.
2. Digital input and Digital output shield signal should connect to FG ⏚ terminal.

(2) CN1 Signal Name and Explanation:

(a) General I/O Signal:

Explanation of General I/O Signal Function

Signal Name	Function Symbol	Pin No.	Wired Mode
Position Pulse Command Input	**Pulse**	4	IO3
	/Pulse	5	
Position Symbol Command Input	**Sign**	6	
	/Sign	7	
Speed / Torque Analog Command Input	**SIN**	12	IO5
Speed / Torque Analog / Limit Command Input	**PIC**	25	
Encoder Output A Phase	**PA**	21	IO4
Encoder Output /A Phase	**/PA**	9	
Encoder Output B Phase	**PB**	22	
Encoder Output /B Phase	**/PB**	10	
Encoder Output Z Phase	**PZ**	23	
Encoder Output /Z Phase	**/PZ**	11	
Home Signal Output	**PZ**	11	IO2
Digital input COM	**DICOM**	17	
Analog Signal Ground Terminal	**AG**	13	
+24V PW Output	**IP24**	8	
+24VPW Ground Terminal	**IG24**	24	

Explanation of General I/O Signal Function

Signal Name	Function Symbol	Mode	I/O Operation and Function	Chapter
Position Pulse Command Input	**Pulse**	Pe	The Driver can receive 3 kinds of Command below: . (Pulse)+ (Sign) . (CCW)/ (CW)Pulse . AB Phase pulse	5-4-1
	/Pulse			
Position Sign Command Input	**Sign**			
	/Sign			
Speed Analog command Input	**SIN**	S	In Speed Mode, when external speed command is operated at SPD1=0, SPD2=0, input the voltage range: **-10V~+10V**, **Sn216** can be set input voltage: ±10V's Motor output speed.	5-3-1 5-3-2 5-3-3 5-3-4
Torque Analog Command Input		T	In Torque Mode, input the voltage range **-10~+10V**, **Tn103** can be set input voltage ±10V's motor output torque.	5-2-1 5-2-2
Torque Control Speed Limit Command	**PIC**	T	In Torque Mode, when external speed limit is operated at input connect point **SPD1=0 & SDP2=0(P.S),** input voltage range: **0~+10V**, 10V's speed limit stands for motor's ratio speed.	5-2-6
Position/Speed Torque Limit Command		Pi Pe S	In Speed Mode, when external torque limit is be used at input connect point **TLMT=1(P.S.) ,** input voltage range: **0~+10V**, to input 10V will limit the motor CCW torque is 300% of rate torque.	5-3-10
Encoder Output A Phase	**PA**	ALL	Outputting the Motor Encoder Signal through pulse per rotation handle. The pulse quantity of every rotating can be set in **Cn005**. When "1" is set in **Cn004,** it is CCW rotation from the motor load terminal direction, and A Phase gets 90 degree ahead B Phase. Signal Output is Line Driver.	5-3-5
Encoder Output / A Phase	**/PA**			
Encoder Output B Phase	**PB**			
Encoder Output / B Phase	**/PB**			
Encoder Output Z Phase	**PZ**			
Encoder Output / Z Phase	**/PZ**			
Analog Signal Ground Terminal	**AG**	ALL	Analog signal grounding: **CN1 - > Pin 12, 25**.	—
Digital input COM Terminal	**DICOM**	ALL	Digital input power supplement common terminal.	—
+24V PW Output	**IP24**	ALL	+24V power output terminal(Max. 0.2A).	—
+24V PW Ground Terminal	**IG24**	ALL	+24V power grounding terminal	—

P.S.: "1" stands for "close loop with **IG24**"; "0" stands for "open loop with **IG24**".
PW is abbreviation of Power

(b) Digital I/O Signal:

For many kinds of application, the digital input/output terminal layout of all operation mode are accordingly different. In order to provide more functions, our drives can provide multi terminal layout settings. Users can set these functions for application.

Digital input terminal layout provides 6 (**Pin1~13, 14~16**) programmable terminal; digital output terminal provides 4 (**Pin18~20**) programmable terminals. The diagram below shows the default digital input/output terminal placement and functions. Please refer to 5-6-1 to check related parameters setting.

Default Digital Input Terminal placement Functions and Wired Mode

Signal	Terminal Layout	Default Function	Pin No.	Wired Mode
Servo ON	DI-1	**SON**	1	IO1
Alarm reset	DI-2	**ALRS**	14	
PI/P Switch	DI-3	**PCNT**	2	
Servo Lock	DI-4	**LOK**	15	
Internal speed command 1	DI-5	**SPD1**	3	
External Torque Limit	DI-6	**TLMT**	16	

Default Digital Input Terminal Layout Functions and Wired Mode

Signal	Terminal Layout	Default Function	Pin No.	Wired Mode
Servo ready	DO-1	**RDY**	18	IO1
Alarm	DO-2	**ALM**	19	
Zero speed	DO-3	**ZS**	20	

Digital Input Function

(Except CCWL and CWL are high electric potential, other terminal layout are low electric potential. Please refer to 5-6-1 to see related parameters)

<table>
<tr><th>Signal Name</th><th>Function Sign</th><th>Mode</th><th>I/O Function</th><th>Chapter</th></tr>
<tr><td>Servo On</td><td>SON</td><td>ALL</td><td>SON and IG24 close loop: Servo ON ; SON and IG24 open loop: Servo OFF. Attention: Before power on, the input connect point SON (servo on) can not be operated to avoid danger.</td><td>5-6-3
5-6-4</td></tr>
<tr><td>Abnormal Reset</td><td>ALRS</td><td>ALL</td><td>ALRS and IG24 close loop: Relieving the stop-situation from of abnormality. But the abnormality of encoder or memory will cause the same alarm again. Please reset power after the abnormality is eliminated.</td><td>8-1</td></tr>
<tr><td>PI/P switch</td><td>PCNT</td><td>Pi/Pe/S</td><td>PCNT and IG24 close loop will cause the speed loop control transforming to ratio control from ratio integration control.</td><td>5-3-11</td></tr>
<tr><td>CCW
Operation limit</td><td>CCWL</td><td>ALL</td><td>Connect to CCW over travel detector: CCWL and IG24 close loop; open loop with IG24 -> CCW over travel operates.</td><td>5-4-8
5-6-3
5-6-4</td></tr>
<tr><td>CW
Operation limit</td><td>CWL</td><td>ALL</td><td>Connect to CW over travel detector: CWL and IG24 close loop; open loop with IG24 -> CW over travel operates.</td><td>5-4-8
5-6-3
5-6-4</td></tr>
<tr><td>External torque limit</td><td>TLMT</td><td>Pi/Pe/S</td><td>TLMT and IG24 close loop will cause the motor-output-torque-limit to stay in the command-voltage range of torque-limit-terminal-layout (PIC、NIC).</td><td>5-3-10</td></tr>
<tr><td>Pulse error amount delete</td><td>CLR</td><td>Pi/Pe</td><td>When CLR and IG24 close loop, delete the pulse amount in the Position Error Counter.</td><td>5-4-7</td></tr>
<tr><td>Servo lock</td><td>LOK</td><td>S</td><td>When LOK and IG24 close loop will transform speed control mode into position control mode in order to lock the motor at the last position.</td><td>5-3-12</td></tr>
<tr><td>Emergency stop</td><td>EMC</td><td>ALL</td><td>When EMC and IG24 close loop: Emergency stop -> Servo Off and exit the rotating statue, and Cn008 will decide if the dynamic Brake operates.</td><td>5-6-4</td></tr>
<tr><td>Internal speed command / limit select 1
Internal speed command / limit select 2</td><td>SPD1
SPD2</td><td>S/T</td><td>
<table>
<tr><th>SPD2</th><th>SPD1</th><th>Speed Command (Speed Mode)</th><th>Speed Limit Command (Torque Mode)</th></tr>
<tr><td>0</td><td>0</td><td>External command(SIN)</td><td>External limit(PIC)</td></tr>
<tr><td>0</td><td>1</td><td>Sn201</td><td>Tn105</td></tr>
<tr><td>1</td><td>0</td><td>Sn202</td><td>Tn106</td></tr>
<tr><td>1</td><td>1</td><td>Sn203</td><td>Tn107</td></tr>
</table>
Internal speed setting and limit:

“1”: Close loop with IG24
“0”: Open loop with IG24
</td><td>5-2-6
5-3-1</td></tr>
</table>

Digital Input Function Explanation

(Except CCWL and CWL are the high electric potential, other terminal layout are the low electric potential, please refer to 5-6-1 to check related parameters setting)

<table>
<tr><th>Signal Name</th><th>Function Symbol</th><th>Mode</th><th>I/O Function</th><th>Chapter</th></tr>
<tr><td>Control Mode Switch</td><td>MDC</td><td>Pe/S/T</td><td>When MDC and IG24 close loop, current control mode will transform into default control mode, please refer to Cn001.</td><td>5-1
5-6-2</td></tr>
<tr><td>Position Command Limit</td><td>INH</td><td>Pe</td><td>When INH and IG24 close loop, position command input does not operate (do not accept external pulse command).</td><td>5-4-1</td></tr>
<tr><td>Speed Command Counter Wise</td><td>SPDINV</td><td>S</td><td>When SPDINV and IG24 close loop in speed mode, setting rotating speed will become counter-wise rotating speed.</td><td>5-3-7</td></tr>
<tr><td>Gain Select</td><td>G-SEL</td><td>Pi/Pe/S</td><td>When G-SEL and IG24 close loop, first stage control gain switch to the second control gain.</td><td>5-3-11</td></tr>
<tr><td>Electric Gear ratio Numerator 1~2</td><td>GN1
GN2</td><td>Pi/Pe</td><td>Electric gear ratio: select explanation:
<table><tr><th>GN2</th><th>GN1</th><th>Electric Gear ratio Numerator</th></tr><tr><td>0</td><td>0</td><td>Pn302</td></tr><tr><td>0</td><td>1</td><td>Pn303</td></tr><tr><td>1</td><td>0</td><td>Pn304</td></tr><tr><td>1</td><td>1</td><td>Pn305</td></tr></table>“1”: Close loop with IG24
“0”: Open loop withIG24</td><td>5-4-3</td></tr>
<tr><td>Internal Position Command Trigger</td><td>PTRG</td><td>Pi</td><td>When PTRG and IG24 close loop (positively-triggered), the motor will select related position command to operate in accordance with the terminal layout POS1~POS4.</td><td>5-4-8</td></tr>
<tr><td>Internal Position Command Hold</td><td>PHOLD</td><td>Pi</td><td>When PHOLD and IG24 close loop(positively-triggered), the motor will stay holding.</td><td>5-4-8</td></tr>
<tr><td>Home</td><td>SHOME</td><td>Pi/Pe</td><td>When SHOME and IG24 close loop(positively-triggered), HOME function operates</td><td>5-4-8</td></tr>
<tr><td>External Origin</td><td>ORG</td><td>Pi</td><td>When ORG and IG24 close loop(positively-triggered), server will use this as external reference point for home position returning.</td><td>5-4-8</td></tr>
</table>

Digital Input Function Explanation

(Except CCWL and CWL are the high electric potential, other terminal layout are the low electric potential, please refer to 5-6-1 to check related parameters setting)

<table>
<tr><th>Signal Name</th><th>Function Symbol</th><th>Mode</th><th>I/O Function</th><th>Chapter</th></tr>
<tr>
<td>Internal Position Command select 1~4</td>
<td>POS1
POS2
POS3
POS4</td>
<td>Pi</td>
<td>Internal position command select :
<table>
<tr><th>POS4</th><th>POS3</th><th>POS2</th><th>POS1</th><th>Internal Position Command select</th></tr>
<tr><td>0</td><td>0</td><td>0</td><td>0</td><td>Pn317, Pn318</td></tr>
<tr><td>0</td><td>0</td><td>0</td><td>1</td><td>Pn320, Pn321</td></tr>
<tr><td>0</td><td>0</td><td>1</td><td>0</td><td>Pn323, Pn324</td></tr>
<tr><td>0</td><td>0</td><td>1</td><td>1</td><td>Pn326, Pn327</td></tr>
<tr><td>0</td><td>1</td><td>0</td><td>0</td><td>Pn329, Pn330</td></tr>
<tr><td>0</td><td>1</td><td>0</td><td>1</td><td>Pn332, Pn333</td></tr>
<tr><td>0</td><td>1</td><td>1</td><td>0</td><td>Pn335, Pn336</td></tr>
<tr><td>0</td><td>1</td><td>1</td><td>1</td><td>Pn338, Pn339</td></tr>
<tr><td>1</td><td>0</td><td>0</td><td>0</td><td>Pn341, Pn342</td></tr>
<tr><td>1</td><td>0</td><td>0</td><td>1</td><td>Pn344, Pn345</td></tr>
<tr><td>1</td><td>0</td><td>1</td><td>0</td><td>Pn347, Pn348</td></tr>
<tr><td>1</td><td>0</td><td>1</td><td>1</td><td>Pn350, Pn351</td></tr>
<tr><td>1</td><td>1</td><td>0</td><td>0</td><td>Pn353, Pn354</td></tr>
<tr><td>1</td><td>1</td><td>0</td><td>1</td><td>Pn356, Pn357</td></tr>
<tr><td>1</td><td>1</td><td>1</td><td>0</td><td>Pn359, Pn360</td></tr>
<tr><td>1</td><td>1</td><td>1</td><td>1</td><td>Pn362, Pn363</td></tr>
</table>
Internal position command select explanation:
“1”: close loop with IG24
“0”: open loop with IG24</td>
<td>5-4-2</td>
</tr>
<tr>
<td>Torque Command Reverse</td>
<td>TRQINV</td>
<td>T</td>
<td>When TRQINV and IG24 close loop in torque mode, torque command become a reverse direction.</td>
<td>5-2-4</td>
</tr>
</table>

Digital Output Function Explanation

(The terminal layout here from this explanation are all the low electric potential, please refer to 5-6-1 to check parameter settings)

Signal Name	Function Symbol	Mode	I/O Function	Chapter
Servo Ready	**RDY**	ALL	Main power and control power input are normal. Under the situation of no alarm, terminal layouts **RDY** and **IG24** close loop.	—
Alarm	**ALM**	ALL	If normally operates, the terminal layouts **ALM** and **IG24** open loop. When alarm occurs, protection-function operates, the terminal and **IG24** close loop.	—
Zero Speed	**ZS**	S	When the motor speed is less than the speed from **Sn215,** the terminal layout **ZS** and **IG24** close loop.	5-3-12
BK Signal	**BI**	ALL	When **Cn008** is set “1” or “3” and the servo on, the terminal layout **BI** and **IG24** close loop; when servo off , terminal layout and **IG24** open loop. (When this terminal layout is generally applied, it is the Brake relay, which is connected to control motor).	5-6-4 5-6-5
In Speed	**INS**	S	When the motor speed has achieved the setting speed from **Cn007, INS** and **IG24** close loop.	5-3-12
In Position	**INP**	Pi/Pe	When the amount of position error counter is less than the amount range which is set in **Pn307, INP and IG24** close loop.	5-4-9
Home	**HOME**	Pi/Pe	When HOME is accomplished, **HOME** and **IG24** close.	5-4-8
In Torque	**INT**	ALL	When the output torque reach setting value of Tn108, INT and IG24 became a close loop.	

(3) CN1 Interface Circuit and Wire Mode:

The diagram below introduces all interface circuit of CN1 and wire-method of host controller.

(a) Digital input interface circuit (**IO1**):

Digital input interface circuit can be operated by relay or collector transistor circuit. The relay should be the low electric current, in order to avoid the faulty contacting. External voltage: 24V.

Internal 24V Power	External 24V Power
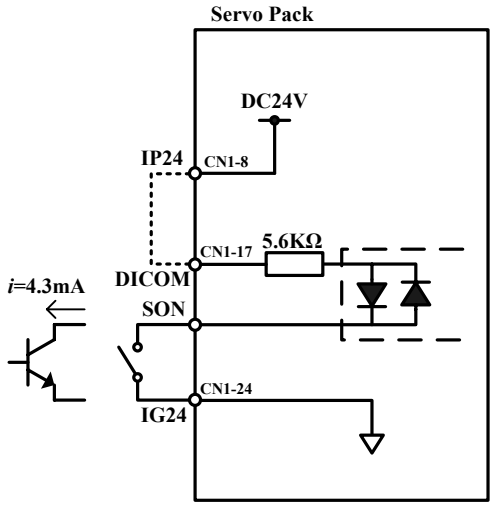	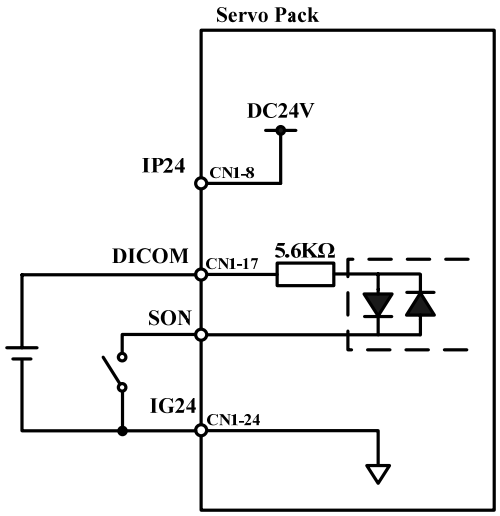

(b) Digital Output Interface Circuit (**IO2**):

When using external power, please attention to the power polarity. Adverse polarity will case circuit damage. Digital output is “Open Collector”. The maximum of external voltage is 24V, and the maximum electric current is 10mA.

Internal 24V Power	External 24V Power
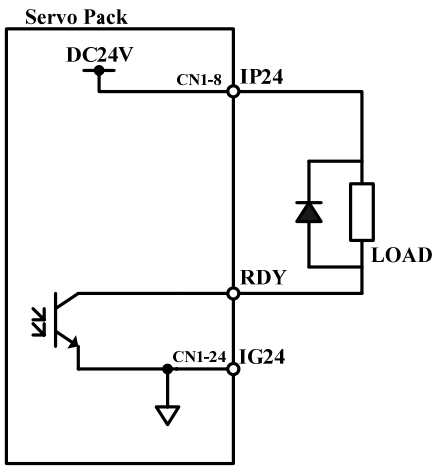	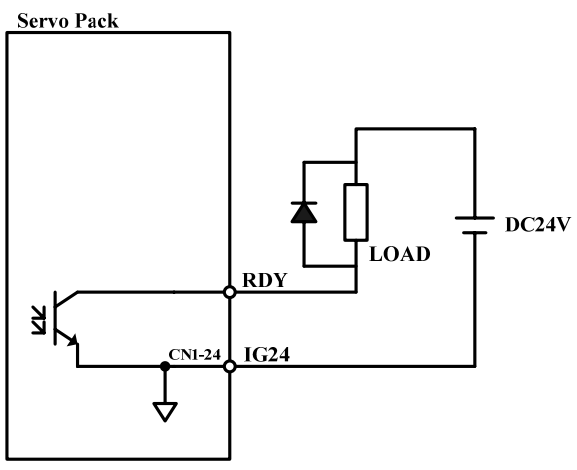

(c) Pulse Command Input Interface Circuit (**IO3**):

Suggesting to use the input method of Line Driver to send the pulse command. The maximum input command frequency is 500kpps. Using the input method of Open Collector will cause the decrease of input command frequency, the maximum input command frequency is 200kpps. The servo provides only 24V power, and other power should be prepared. Adverse polarity of power will cause the servo damage. The maximum of External power (Vcc) is 24V limited. Input current is about 8~15mA. Please refer to the examples below to select resistance. Please refer to 5-4-1 to check pulse input command timing.

<table>
<tr><th colspan="2">Line Driver pulse command input</th><th colspan="2">Open Collector pulse command input</th></tr>
<tr><td colspan="2"> 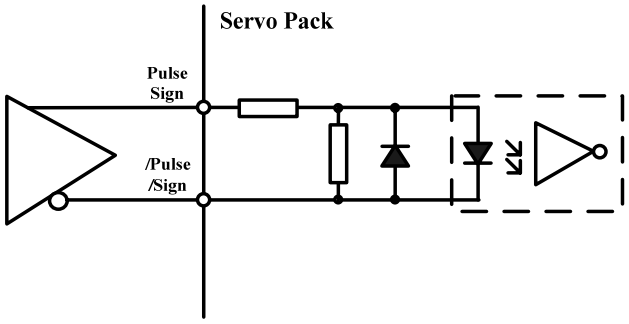

The max. frequency of line driver type pulse command is 500kpps</td><td colspan="2"> 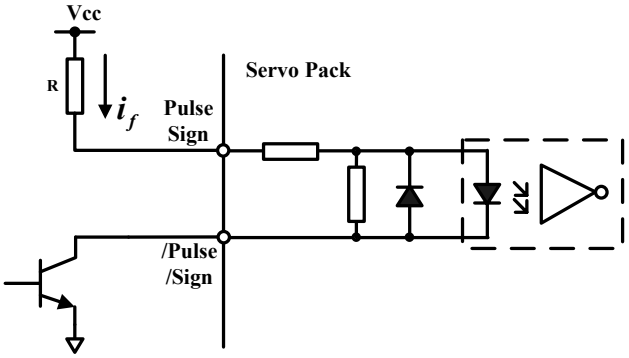

Maximum input command frequency of open collector is 200kpps</td></tr>
<tr><th colspan="2">Open Collector (Internal 24V)</th><th colspan="2">Open Collector – Selection of input Resistance</th></tr>
<tr><td colspan="2"> 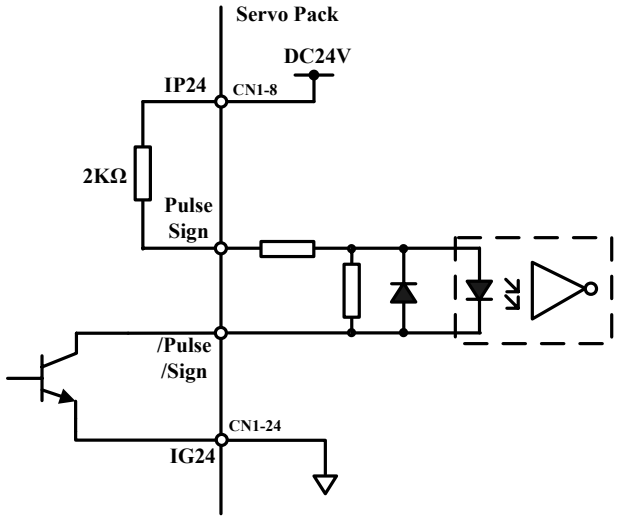

The maximum input command frequency of open collector is 200kpps</td><td>External Power
Vcc=24V
R=2KΩ</td><td>External Power
Vcc=12V
R=750Ω</td><td>External Power
Vcc=5V
R=100Ω</td></tr>
</table>

(d) Encoder Output Interface Circuit (**IO4**):

Encoder output interface circuit is the output method of Line Driver, please let end terminal resistance(R=200~330Ω) connect to Line Receiver input terminal.

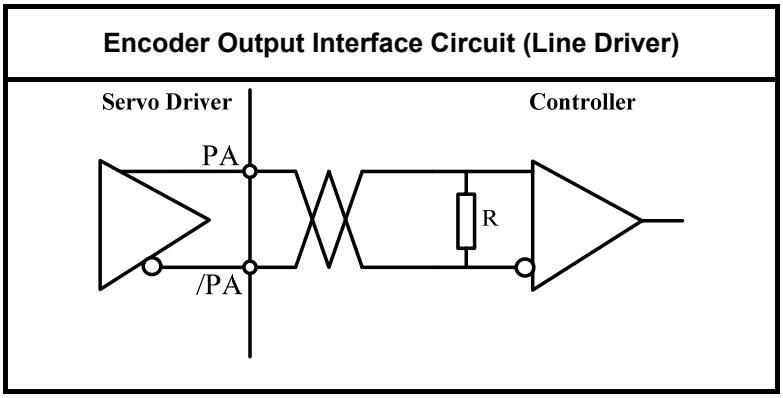

(e) Analog Input Interface Circuit (**IO5**):

There is sometimes ripple inside the servo internal power. Adverse external power polarity will cause severe damage. Maximum external power voltage (Vc) should be less than12V; terminal input voltage should not more than10V. Over voltage will cause damage. When using internal power of server, user need to choose the resistance (suggestion: more than 3KΩ), which maximum current is less than 10mA.

SIN Input impedance: 15KΩ

PIC Input impedance: 40KΩ

NIC Input impedance: 20KΩ

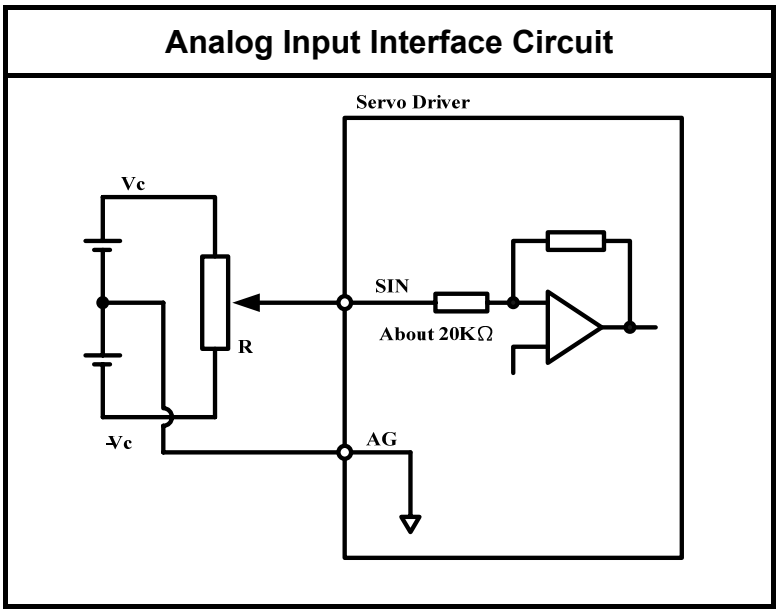

2-2-2 Encoder Connector (CN2) Terminal Layout

(1) Diagram of CN2 Terminal:

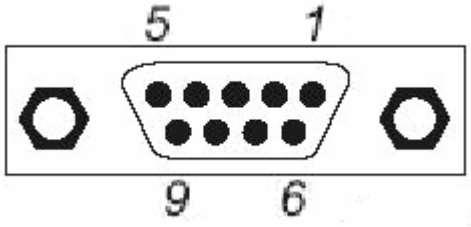

Pin No.	Name	Function
1	B	Encoder B Phase Input
2	/A	Encoder /A Phase Input
3	A	Encoder A Phase Input
4	GND	+5V PW Ground Terminal
5	+5E	+5V PW Output Terminal

Pin No.	Name	Function
6	——	————————
7	/Z	Encoder /Z Phase Input
8	Z	Encoder Z Phase Input
9	/B	Encoder /B Phase Input

P.S.: Do not wire to the terminal which is un-operated.

(2) Name and Explanation of I/O Signal:

Pin No.	Signal Name	Code	Encoder Output No. and Color		Terminal Layout Function
			General Joint	Plug-in Joint	
			9 wires (fewer wiring)	Output No.	
5	Power output + Terminal	+5V	White	B	5V Power for encoder (provided from driver). When the cable is more than 20m, user should separately use 2 cables to avoid decreasing voltage of encoder. When the cable is more than 30m, please contact to the distributorship.
4	Power output - Terminal	0V	Black	I	
3	A Phase encoder input A	A	Green	A	Encoder A Phase: From motor terminal to the driver.
2		/A	Blue	C	
1	B Phase encoder input	B	Red	H	Encoder B Phase: From motor terminal to the driver.
9		/B	Pink	D	
8	Z Phase encoder input	Z	Yellow	G	Encoder Z Phase: From motor terminal to the driver.
7		/Z	Orange	E	
6	No operated				Do not wire.

2-2-3 Encoder Connector (CN3/CN4) Terminal Layout

Diagram of CN3/CN4 Terminal :

CN3 for RS-485		
Pin NO.	Name	Function
1	__	_____
2	__	_____
3	__	_____
4	__	_____
5	Data+	RS-485 Serial data communication (+)
6	__	_____
7	Data-	RS-485 Serial data communication (-)
8	__	_____

CN4 for RS232 and RS-485		
Pin NO.	Name	Function
1	RxD	RS-232 Serial data receive
2	__	_____
3	GND	RS-232 Signal Ground
4	TxD	RS-232 Serial data transmit
5	Data+	RS-485 Serial data communication (+)
6	__	_____
7	Data-	RS-485 Serial data communication (-)
8	__	_____

P.S : Do not wire to the terminal which is un-operated.

2-3 Typical Circuit Wiring Examples

2-3-1 Position Control Mode (Pe Mode) (Line Driver)

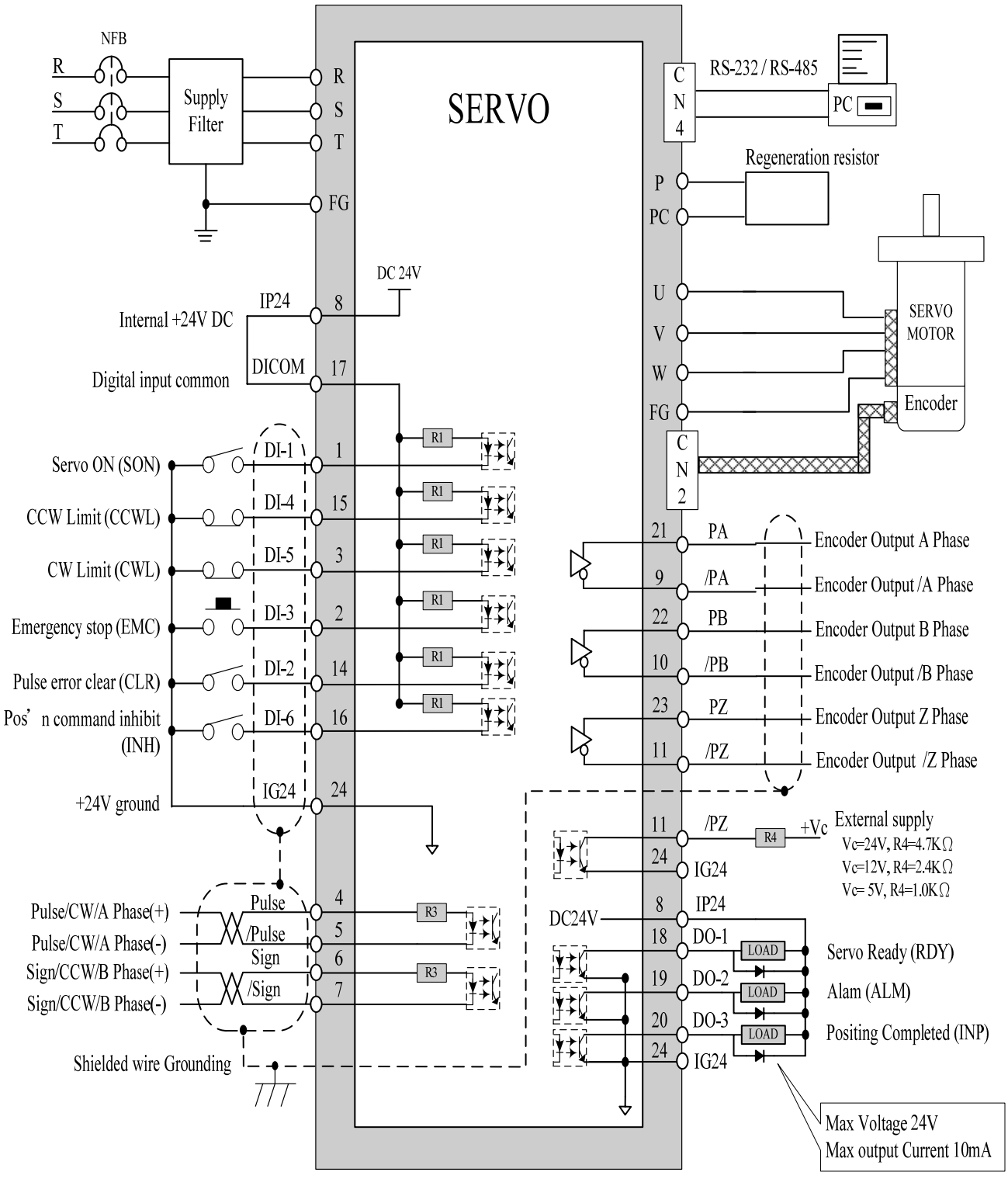

2-3-2 Position Control Mode (Pe Mode) (Open Collector)

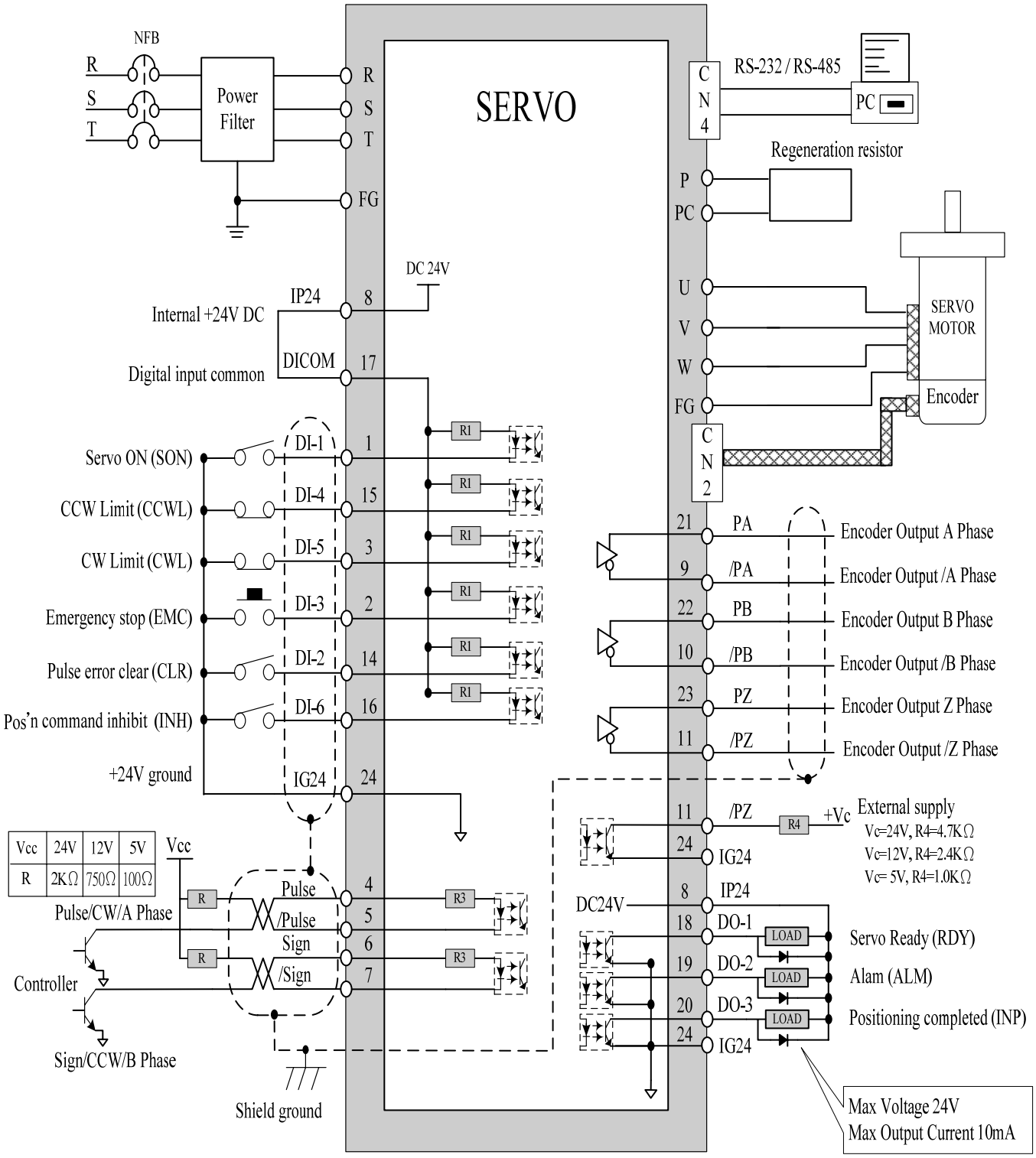

2-3-3 Position Control Mode (Pi Mode)

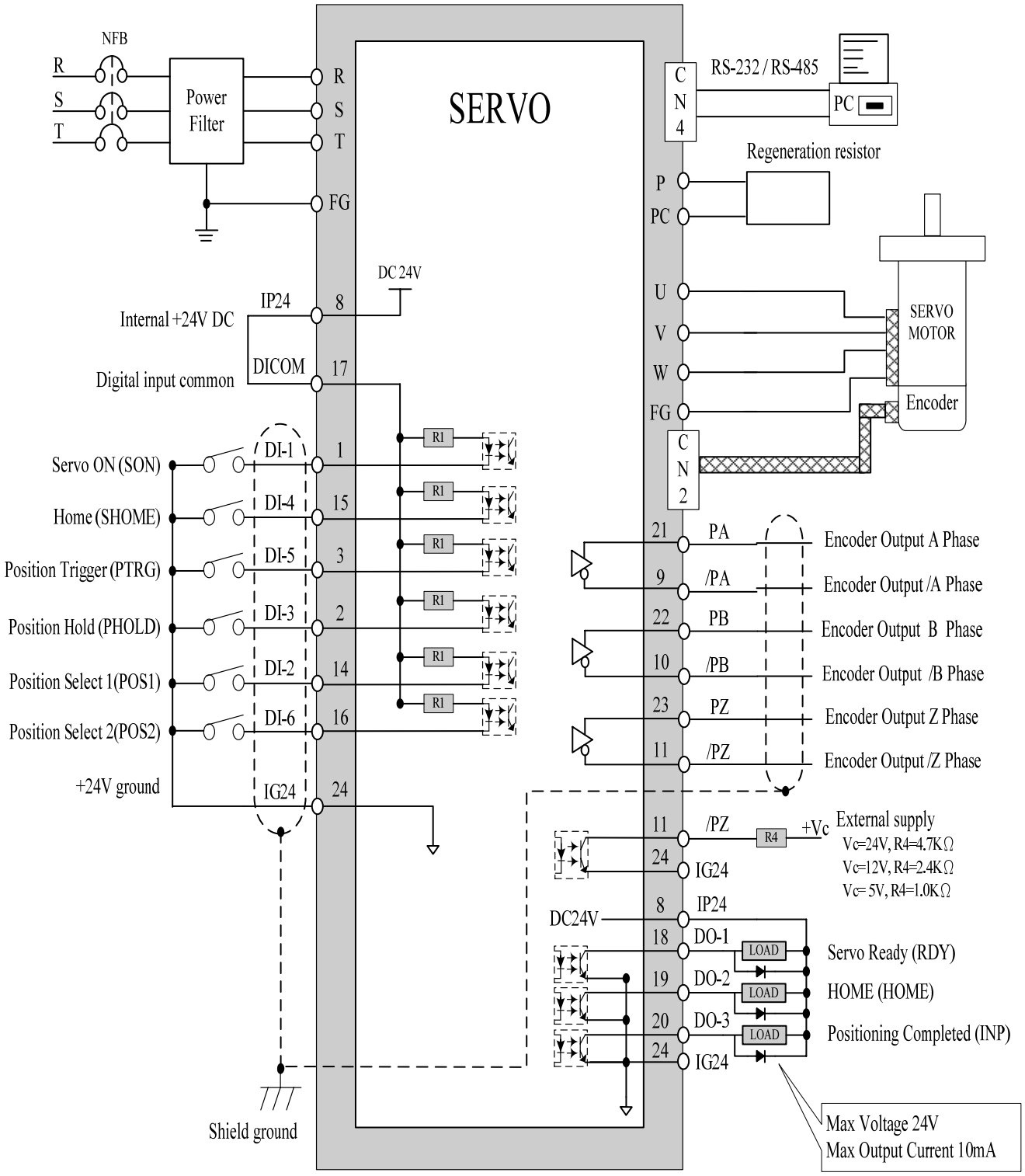

2-3-4 Speed Control Mode (S Mode)

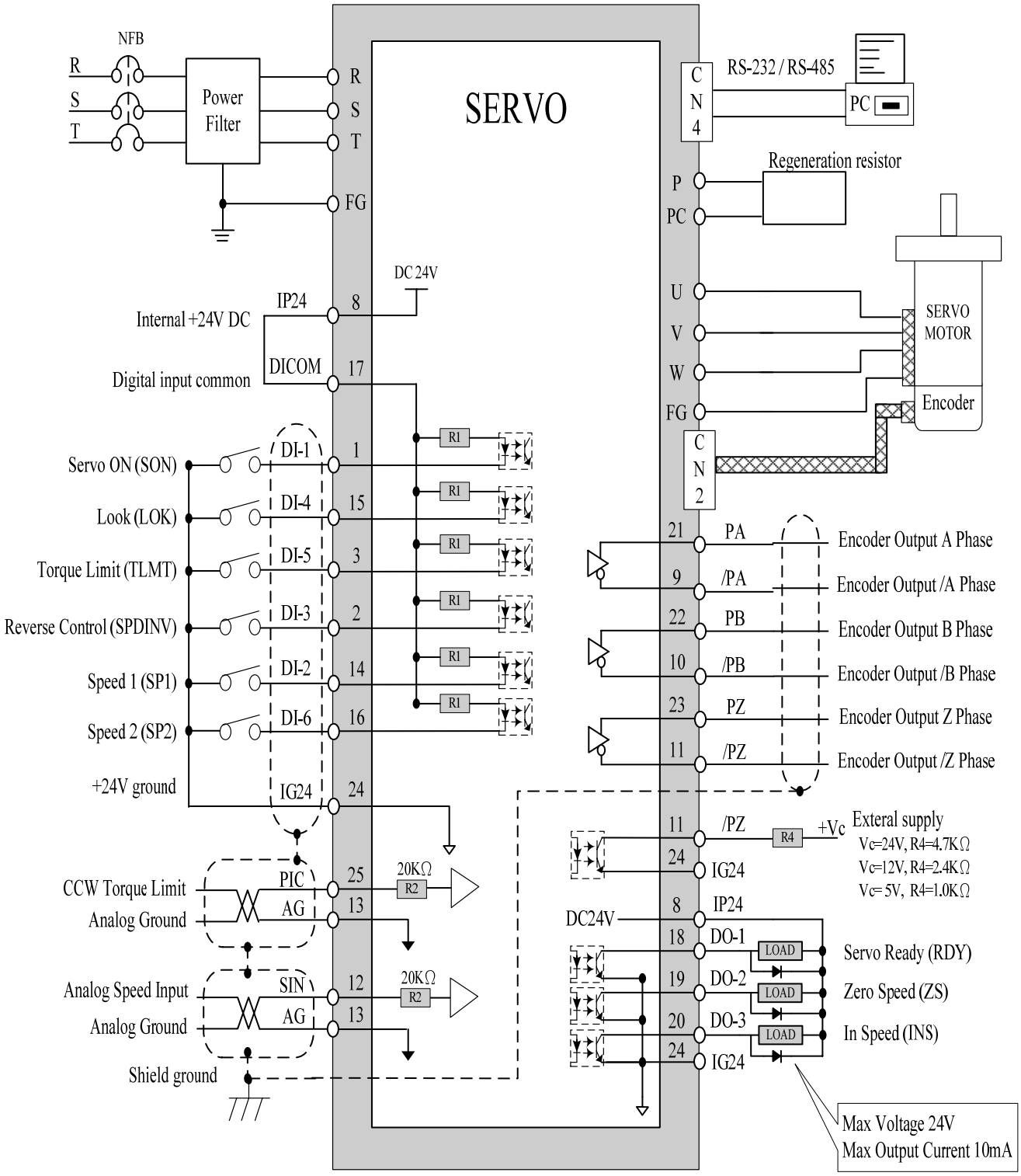

2-3-5 Torque Control Mode (T Mode)

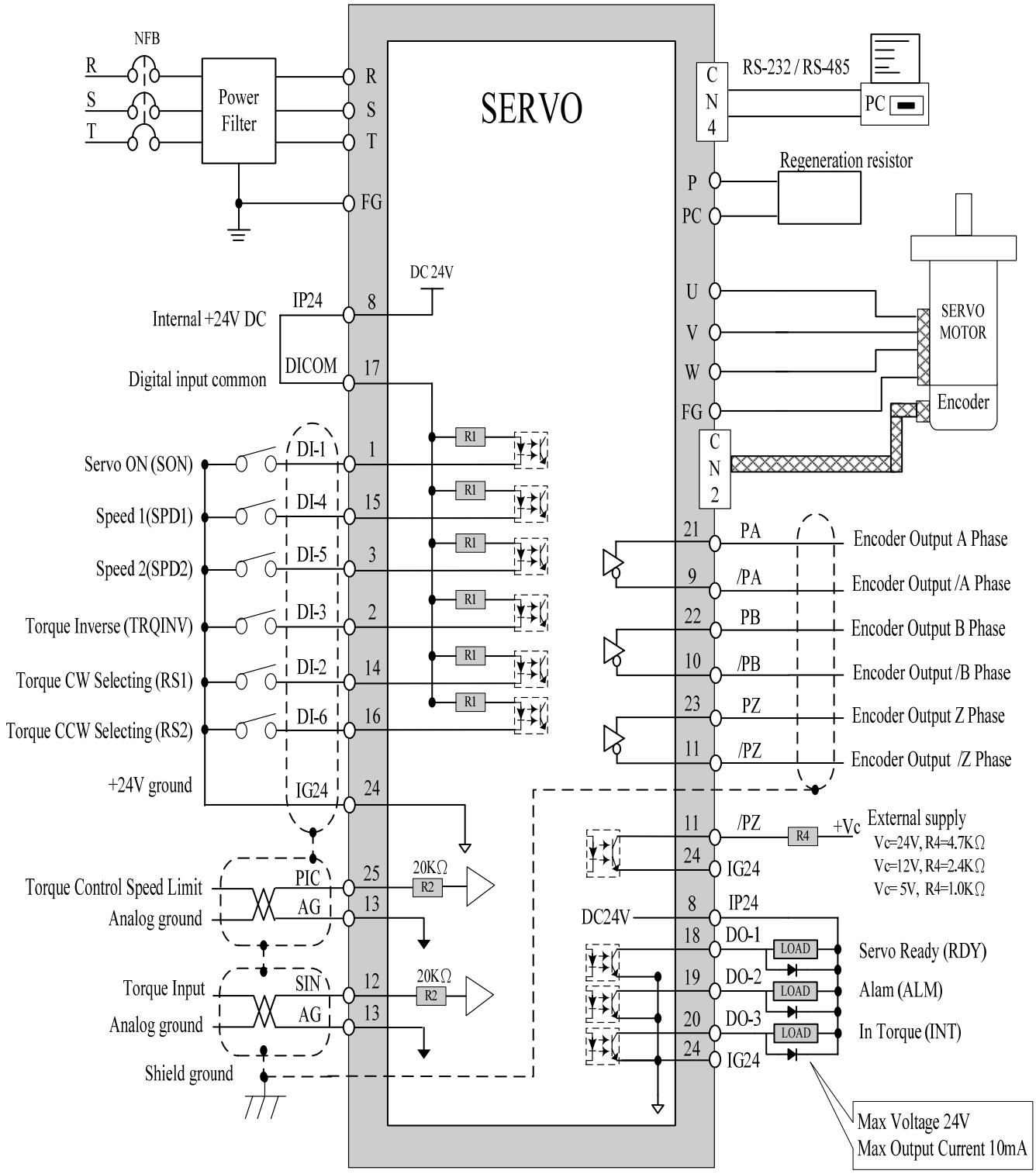

Chapter 3 Panel Operator / Digital Operator

3-1 Panel Operator on the Drives

The operator keypad & display contains a 5 digit 7 segment display, 4 control keys

and one Power status LED (Green) is lit when the power is applied to the unit.

Power on to light up charge LED and gradually dark when internal main circuit discharge accomplished.

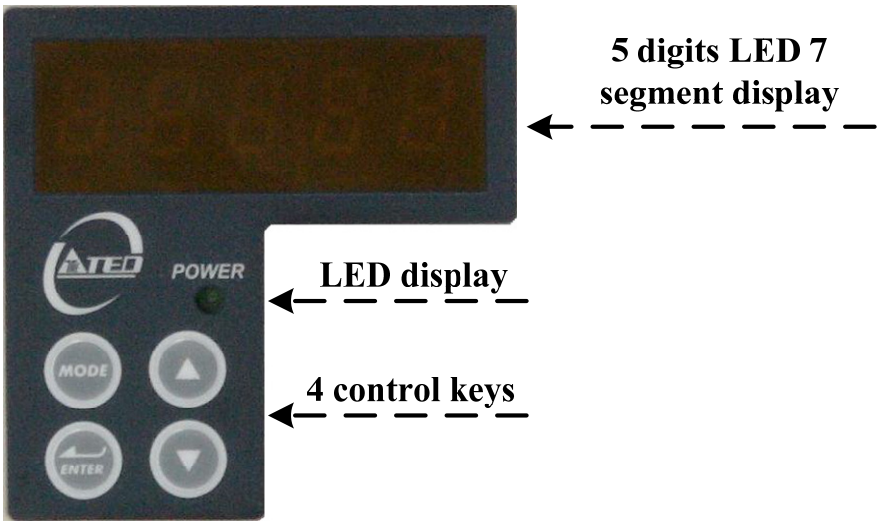

Key	Name	Function Keys Description
MODE	MODE/SET	1. To select a basic mode, such as the status display mode, utility function mode, parameter setting mode, or monitor mode. 2. Returning back to parameter selection from data-setting screen.
▲	INCREMENT	1. Parameter Selection. 2. To increase or decrease the set value. 3. Press ▲ and ▼ at the same time to **RESET ALARM**.
▼	DECREMENT	
ENTER	DATA SETTING & DATA ENTER	1. To confirm data and parameter item. 2. To shift to the next digit on the left. 3. To enter the data setting (press 2 sec.)

After power on, MODE button can be used to select 9 groups of parameter.

By pressing the Mode key repeatedly once at a time you can scroll trough the displays below.

Step	Key	LED Display after Operation	Description
1	Power on	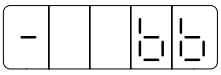	Drive status parameters.
2	MODE	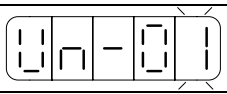	Diagnostic parameters.
3	MODE	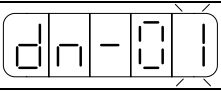	Alarm parameters.
4	MODE	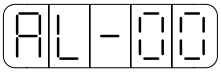	System Control parameters.
5	MODE	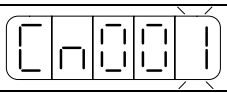	Torque Control parameters.
6	MODE	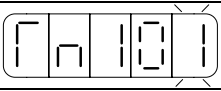	Speed Control parameters.
7	MODE	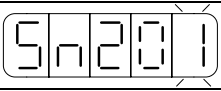	Position Control parameters.
8	MODE	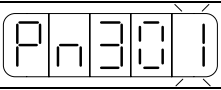	Quick set up parameters.
9	MODE	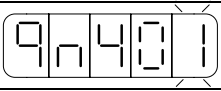	Multi function I/O (programmable Inputs/Outputs) Parameters.
10	MODE	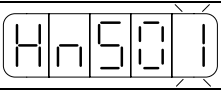	Return to Drive status parameters.
11	MODE	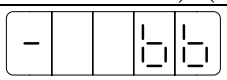	Drive status parameters again.

Once the first parameter in a parameter group is displayed use **Increment** or **Decrement** keys to select the required parameter then use **Enter** key in order to view and alter the parameter setting, once this is done then press **Enter** key again to save the change.

Notes: On each parameter display the first digit will be flashing, the enter key can be used to move between digits.

Example procedures are shown below: -

Ex: Setting Speed Parameter Sn203 to 100rpm.

Step	Key	LED Display after Operation	Description
1	Power On	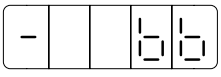	Display status of servo drive
2	MODE	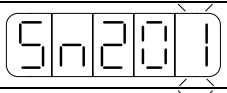	Press **MODE-Key** 6 times to select Sn 201
3	▲	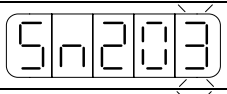	Press **INCRMENT- Key** twice Sn203 is displayed.
4	ENTER	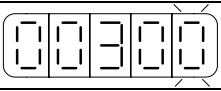	To view the Sn203 preset value by press **ENTER-Key** for 2 seconds
5	ENTER	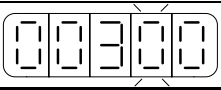	Shift to the second digit by press **ENTER- Key** once

Step	Key	LED Display after Operation	Description
6	ENTER	00300	Shift to next Digit by press **ENTER-Key** once again
7	▼	00100	Change the digit preset value by press the **DECREMET-Key** twice
8	ENTER	-SET- Sn203	To save the altered preset value, Press the **ENTER- Key** for 2 seconds until **"SET"**is displayed briefly and then display is returned to parameter Sn203

Following example shows the sequence where a parameter preset value is displayed

When no change is made and it is skip back to the original parameter by pressing the Mode-Key.

Step	Key	LED Display after Operation	Description
1	Power ON	- bb	When power on drive status parameter will display
2	MODE	Sn201	Pressing **MODE-Key** 6 times, Sn 201 will be displayed.
3	▲	Sn203	Pressing **INCRMENT- Key** twice Sn203 is displayed.
4	ENTER	00300	To view the Sn203 preset press **ENTER-Key** for 2 seconds.
5	MODE	Sn203	No change is made and LED display return to last select parameter Sn203, press MODE-Key once skip

Some of the data entry in this drive are in the format shown below, for these data the Most significant digit will be shown by the Capital letter "H" as shown below.

Ex: Home search function in position mode **Pn365 = 0212.** Each digit of this preset for Pn365 parameter defines a selection for a specific function.

Bit0 corresponds to a selection for parameter Pn 365.0 and bit1 setting for Pn 365.1 … etc.

Parameter Pn 365 Format for the 5 digits data value is shown below:

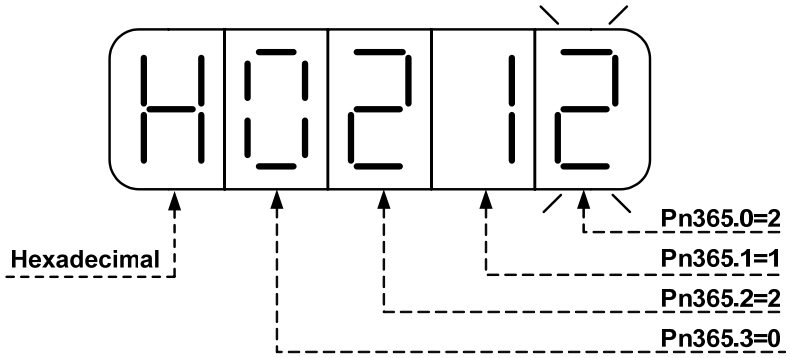

Display of Positive and Negative values:

Description of Positive/Negative Display	Display of Positive	Display of Negative
For negative numbers with 4 digits or less, the negative sign is displayed In the most significant digit as shown. Ex: **Sn201** (Internal Speed Command 1).	3000 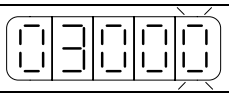	-3000 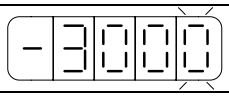
For negative numbers with 4 digits the negative sign is indicated by displaying **all the 5 decimal points** on the display. Ex: **Pn317**(Internal Position Command 1- Rotation number)	30000 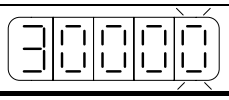	-30000 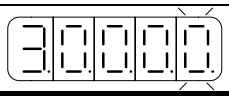

Setting a negative value.

(1) If the negative value has 4 digits or less follow the steps in the example below:

Ex: Sn201(Internal speed command 1)= preset speed of 100 to –100 rpm.

Step	Key	LED Display after Operation	Description
1	Power ON	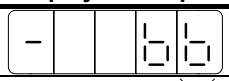	On" power on " **Drive Status** parameter is displayed.
2		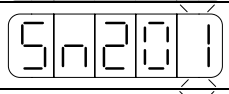	Pressing **MODE-Key** 5 times, Sn 201 will be displayed.
3		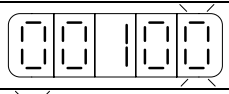	To view the Sn201 preset press **ENTER-Key** for 2 seconds.
4		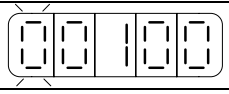	To move to the most significant digit press the **ENTER-Key** 4 times.
5	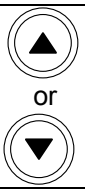	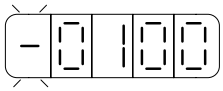	Use **INCREMENT Or DECREMENT** key until the minus sign (_) is displayed. You can toggle between – and + by this key.
6		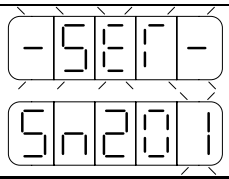	To save the altered preset value, Press the **ENTER- Key** for 2 seconds until **"SET"**is displayed briefly and then display is returned to parameter Sn201.

If the negative value has 5 digits follow the steps in the example below:

Ex: **Pn317** (internal position preset command 1) set to a negative value -10000 revolutions.

Step	Control Keys	LED Display after Operation	Description
1	Power On	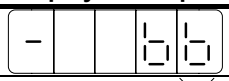	On" power on " **Drive Status** parameter is displayed.
2		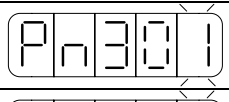	Pressing **MODE-Key** 6 times, position parameter Pn 301 will be displayed.
3		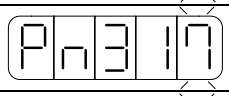	Use **INCREMENT- Key** to display Pn317.
4		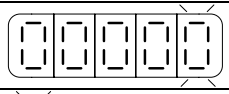	To view the Pn317 preset press **ENTER-Key** for 2 seconds.
5		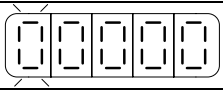	To move to the most significant digit press the **ENTER-Key** 4 times.
6		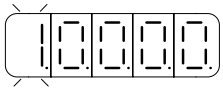	Press **DECREMENT-Key** once to set the most significant digit To 1. And press the **DECREMENT-Key** once again. All 5 decimal points will light up to indicate a negative number.
7		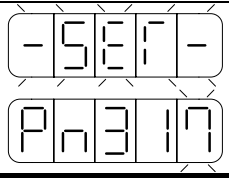	To save the altered preset value, Press the **ENTER- Key** for 2 seconds until **"SET"**is displayed briefly and then display is returned to parameter Pn 317.

Alarm Reset from the Keypad.

All alarm displays can be cleared from the keypad without a need for an external Alarm clear (Reset) signal.

Ex. Under voltage Alarm AL-01.

Step	Control Key	LED Display after Opertion	Description
1	Alarm	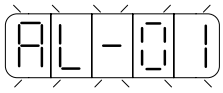	Under voltage Alarm AL-01 is displayed.
2	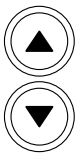	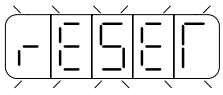	To clear Alarm:- Remove input contact **SON** (Servo On). Then press **INCREMENT-Key and DECREMENT-Key** at the same time. The display will show RESET briefly and then returns back to parameter display.

After Servo drive is power on, user can monitor status bit and status code on the display. LED display for speed / torque control mode and position control mode has the different definition, refer to following pages for detail.

(1) Speed and Torque Control Mode

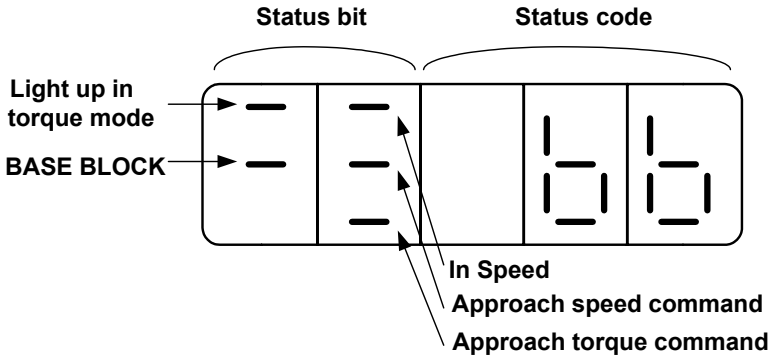

Status code and status bit contents:

Status code	Status bit display and description	
	Indicator On	Indicator Off
BASE BLOCK	Servo Off status	Servo On status
In Speed (INS)	When motor speed greater than the value of Cn007 (Speed reached preset)	When motor speed less than the value of Cn007 (Speed reached preset)
Approach Speed command	When speed command greater than the value of Cn007 (Speed reached preset)	When speed command less than the value of Cn007 (Speed reached preset)
Approach Torque command	When torque command greater than 10% of the rate torque.	When torque command less than 10% of the rate torque.

Status code	Description
	BASE BLOCK **Servo OFF** status(when motor excitation is invalid)
	The servo is under operation status. **Servo ON** status(when motor excitation is valid)
	CCW Operation limit CCWL limit switch is active.
	CW Operation limit CWL limit switch is active.

(2) Position Control Mode:

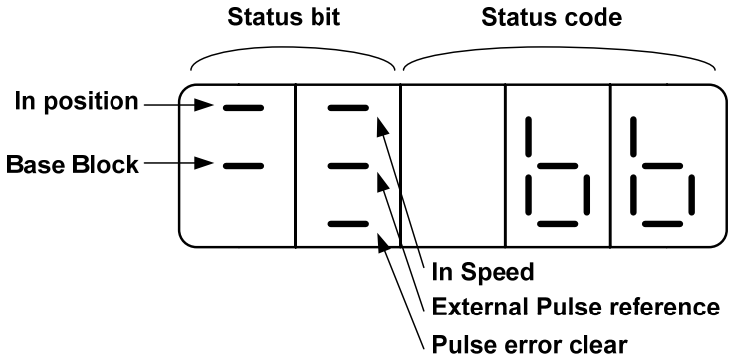

Status code and status bit contents:

Status code	Status bit display and description	
	Indicator On	Indicator Off
BASE BLOCK	Servo Off status	Servo On status
In Position(INP)	When Position pulse error value less than the value of Pn307 (**Position complete value**)	When Position pulse error value greater than the value of Pn307 (**Position complete value**)
In Speed (INS)	When speed command greater than the value of Cn007 (Speed reached preset)	When speed command less than the value of Cn007 (Speed reached preset)
External Pulse Reference Input	When pulse input is exist.	No external puluse input.
Pulse error amount clear	Input contact **CLR is active the pulse error value will be clear.**	Input contact **CLR is not active.**

Status code	Description
	BASE BLOCK **Servo OFF** status(when motor excitation is invalid)
	The servo is under operation status. (Run) **Servo ON** status(when motor excitation is valid)
	CCW Operation limit CCWL limit switch is active.
	CW Operation limit CWL limit switch is active.

3-2 Signal Display

3-2-1 Status Display

Following parameters can be used to display drive and motor Status.

Parameter Signal	Displayed	Unit	Description
Un-01	Actual motor speed	rpm	Actual Motor Speed is displayed in rpm.
Un-02	Actual motor torque	%	It displays the torque as a percentage of the rated torue. Ex: 20 are displayed. It means that the motor torque output is 20% of rated torque.
Un-03	Regenerative load ratio	%	Value for the processable regenerative power as 100% .
Un-04	Accumulated load ratio	%	Value for the rated torque as 100%.
Un-05	Max load rate	%	Max value appeared on accumulated load rate
Un-06	Speed command	rpm	Speed command is displayed in rpm.
Un-07	Position error counter value	pulse	Error between position command value and the actual position feedback.
Un-08	Position feedback pulse counter	pulse	The accumulated number of pulses from the motor encoder.
Un-09	External voltage command	V	External analog voltage command value in volts.
Un-10	Main circuit Vdc Bus Voltage	V	DC Bus voltage in Volts.
Un-11	External speed limit command value	rpm	Display external speed limit command value in rpm.
Un-12	External CCW Torque limit command value	%	Ex: Display 100. Means current external CCW torque limit command is set to 100 %.
Un-13	External CW Torque limit command value	%	Ex: Display 100. Means current external CW toque limit command is set to 100%.
Un-14	Motor feed back – Rotation value (absolute value)	rev	After power on, it displays motor rotation number as an absolute value.
Un-15	Motor feed back – Less then 1 rotation pulse value(absolute value)	pulse	After power on, it displays the pulse number for less than a revolution of the motor as an absolute value.
Un-16	Pulse command – rotation value(absolute value)	rev	After power on, it displays pulse command input rotation number in absolute value.
Un-17	Pulse command – Less then 1 rotation pulse value(absolute value)	pulse	After power on, it displays pulse command input for less than a rotation. pulse value is an absolute value.
Un-18	Torque command	%	It displays the torque command as a percentage of the rated torque. Ex: Display. 50.Means current motor torque command is 50% of rated torque.
Un-19	Load inertia	x0.1	When **Cn002.2=0**(Auto gain adjust disabled), it displays the current preset load inertia ratio from parameter **Cn025**. When **Cn002.2=1**(Auto gain adjust enabled), it displays the current estimated load inertia ratio.

3-2-2 Diagnostic function

Following diagnostics parameters are available:

Parameter Signal	Name and Function
dn-01	Control mode display
dn-02	Output terminal status
dn-03	Input terminal status
dn-04	Software version (CPU version)
dn-05	JOG mode operation
dn-06	Reserve function
dn-07	Auto offset adjustment of external analog command voltag
dn-08	Servo model code
dn-09	ASIC software version display

dn-01 (Control Mode Display)

Access **dn-01** to display the selected control mode.

Control mode display description is listed in the table below:

Control Mode	dn-01 (Control mode display)
Torque control - T	
Speed control - S	
Position control (External pulse command) - Pe	
Position/Speed control switch - Pe/S	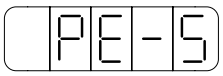
Speed/Torque control switch - S/T	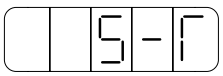
Position/Torque control switch - Pe/T	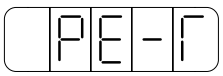
Position control (Internal position command) - Pi	

dn-02 (Output terminal status)

Use dn-02 to check the status of output terminals.

Output status display is described below:

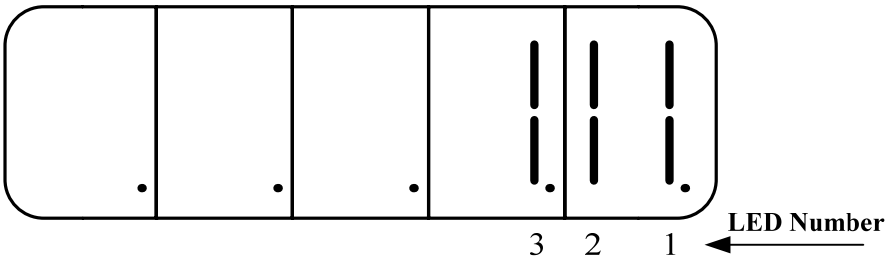

When output terminal signal has a low logic level (**close** loop with **IG24**),
the corresponding LED will be on.

When output terminal signal has a high logic level (**open** loop with **IG24**),
the corresponding LED will be off.

Table below shows the functions of the digital outputs.

Default settings are shown below.

For programmable digital output list see section 5-6-1.

LED No.	Output terminal number	Default function
1	DO-1	**RDY**
2	DO-2	**ALM**
3	DO-3	**ZS**

Note: To set the logic state (High or Low) of for programmable digital outputs refer to section 5-6-1.

dn-03 (Input terminals status)

Use dn-03 to check the status of Input terminals.

Digital Input status display is described below:

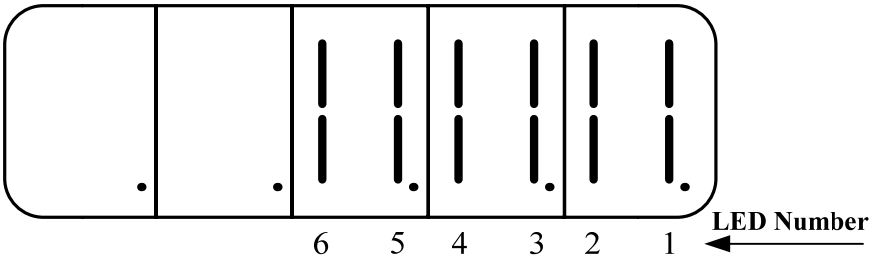

When Input terminal signal has a low logic level (close loop with **IG24**), the corresponding LED will be on.

When Input terminal signal has a high logic level (open loop with **IG24**), the corresponding LED will be off.

Table below shows the functions of the digital input.

Default settings are shown below.

For programmable function list see section 5-6-1.

LED Number	Input terminal number	Default function
1	DI-1	**SON**
2	DI -2	**ALRS**
3	DI -3	**PCNT**
4	DI -4	**LOK**
5	DI -5	**SPD1**
6	DI -6	**TLMT**

dn-04 (Version of Software)

Use **dn-04** to view the current software version of the Servo drive.

Software version can be checked as below:

Step	Keys	LED Display	Description
1	Power On	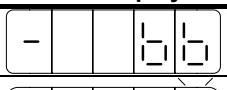	On" power on **Drive Status** is displayed.
2		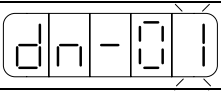	Press **MODE-Key** twice to view diagnostics parameter dn-01.
3		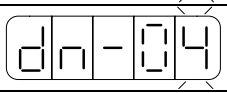	Press **INCREMENT-Key** 3 times to display dn-04.
4		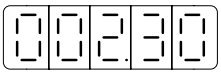	Press **ENTER-Key** for 2 seconds to view the software version. (Software version: 2.30)
5		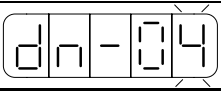	Press **MODE-Key** once to return to dn-04 and parameter selection.

dn-05 (JOG Operation)

Use dn-05 to JOG the motor. Jog is activated by following the steps below:

Note: JOG speed is in accordance with setting of Sn201(internal speed command 1).

Ensure that the required speed is set in Sn201 before executing this function.

Warning: Motor will be agitated run as soon as JOG command is activated.

without the need for SON input (Servo On signal).

Step	Key	LED display	Description
1	Power on	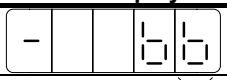	On" power on **Drive Status** is displayed.
2		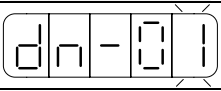	Press **MODE-Key** once to view diagnostics parameter dn-01.
3		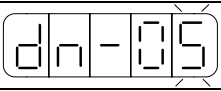	Press **INCREMENT-Key** 4 times to display dn-5.
4		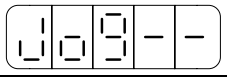	Press **ENTER-Key** for 2 seconds to enter **JOG MODE.** Motor will power on immediately.
5		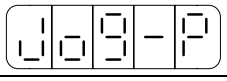	Press **INCREMENT-Key**, motor will run in the pre-defined positive direction.
6		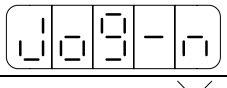	Press **DECREMENT-Key**, motor will run in the pre-defined negative direction.
7		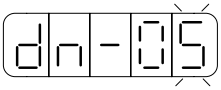	Press **MODE-Key** once to return to dn-05 and parameter selection. Motor stoped the excitation immediately.

dn-07 (Auto offset adjustment of external analog command voltage)

If the external torque or speed analog command is set to 0V and the motor is rotating slowly, this is due to analog input zero offset, use **dn-07** to auto adjust this offset and stop the motor rotating. Follow the steps below:

Step	Key	LED Display	Description
1	**Insert a link between analog command terminal SIN(CN1-26) and Analog Ground terminal AG(CN1-29) before proceeding.**		
2	Power on	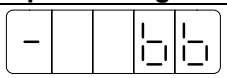	On" power on " **Drive Status** is displayed.
3	MODE	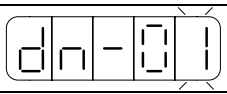	Press **MODE-Key** twice into diagnostics parameter dn-01.
4	▲	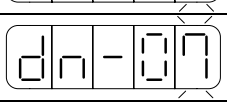	Press **INCREMENT-Key** 6 times to display dn-7.
5	ENTER	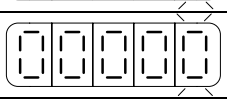	Press **ENTER-Key** for 2 seconds to enter **dn-07**
6	▲	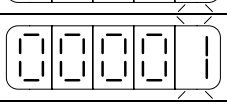	Press **INCREMENT-Key** once to set to 1 (Enable auto offset adjustment).
7	ENTER	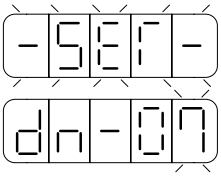	To save the altered preset value and activate auto offset adjust, Press the **ENTER- Key** for 2 seconds until **"SET"**is displayed briefly and then display is returned to parameter dn-07. To save this offset value, please select parameters Tn104 or Sn217 as required and press the ENTER-Key. Tn107 for analog torque command. Sn217 for analog speed command.

Before bias adjusting

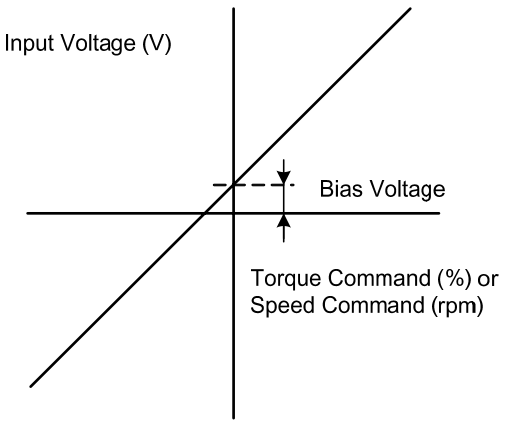

After bias adjusting

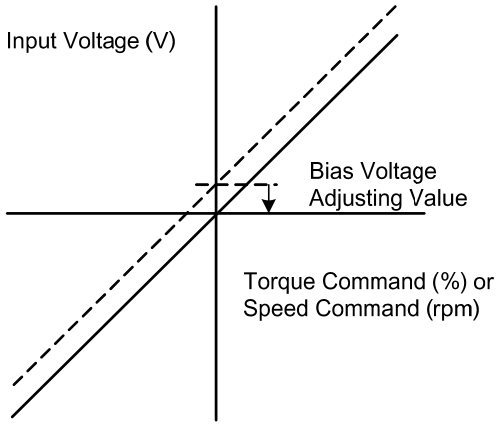

dn-08 (Servo motor Model Code display)

Use **dn-08** to display servo motor code and check the servo drive and motor compatibility according to the table below.

If the dn08 preset is not according to the list below then contact your supplier.

The motor model code is stored in parameter Cn30.

dn-08 Display Cn030 Setting 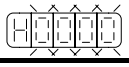	Drive Model	Motor Model	Motor Standards		Encoder Specification
			Watt (W)	Speed (rpm)	
H0000	TSTE10	5CB12	120	3000	2500
H1011		TSC04051	50	3000	2500
H1021		TSC04101	100	3000	2500
H0030		6CC201	200	3000	2000
H1043		TST06201			2500
H0120	TSTE15	7CB30	300	3000	2000
H0121		TSB07301			2500
H0130		6CC201	200	3000	2000
H1133		TST06201			2500
H0140		6CC401	400	3000	2000
H1141		TSC06401			2500
H1143		TST06401			2500
H0210	TSTE20	8CB75	750	3000	2000
H0211		TSB08751			2500
H0220		6CC401	400	3000	2000
H1221		TSC06401			2500
H1223		TST06401			2500
H0230		8CC751	750	3000	2000
H1233		TST08751			2500
H0240		3MB055A	550	1000	2000
H0241		TSB13551A			2500
H0250		3MB055H		1500	2000
H0251		TSB13551H			2500
H0310	TSTE30	8CC751	750	3000	2000
H1313		TST08751			2500
H0320		3MB100A	1000	1000	2000
H0321		TSB13102A			2500
H0330		3MB100B		2000	2000
H0331		TSB13102B			2500
H0340		3MB100H		1500	2000
H0341		TSB13102H			2500
H0351		TSB13102C		3000	2500

Chapter 4 Trial Operation

Before proceeding with trial run, please ensure that all the wiring is correct.

Trial run description below covers the operation from keypad and also from an external controller such as a PLC.

Trial run with external controller speed control loop (analog voltage command) and position control loop (external pulse command).

<table>
<tr><td colspan="2">(1) No-load servo motor.</td></tr>
<tr><td>A. Servo Drive wiring and motor installation</td><td>B. Purpose of trial run</td></tr>
<tr><td> 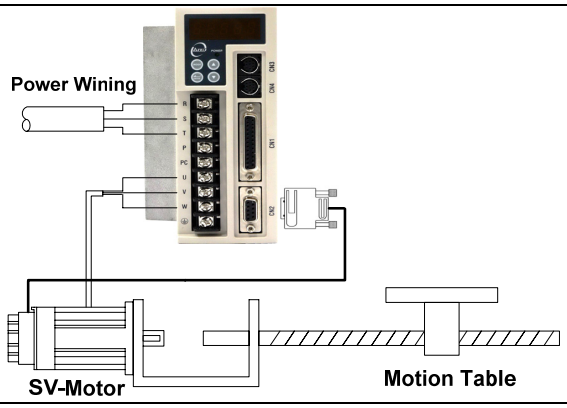
</td><td>Confirm if the items below are correct:
. Drives power cable wiring
. Servo Motor wiring
. Encoder wiring
. Setting servo motor rotation direction and speed</td></tr>
<tr><td colspan="2">(2) No-load servo motor with a host controller. Trial run (Reference:4-2)</td></tr>
<tr><td>A. Servo drive wiring and motor installation</td><td>B. Purpose of trial run</td></tr>
<tr><td> 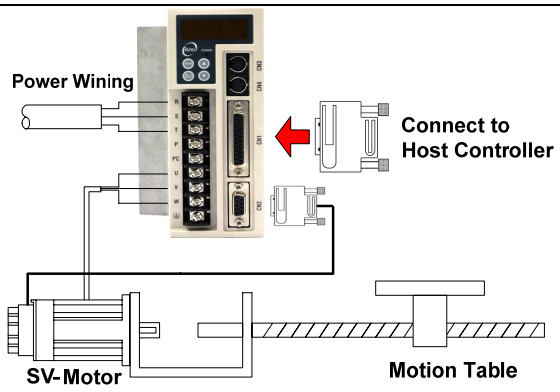
</td><td>Confirm if the items below are correct:
. Control signal wiring between host controller and servo drive.
. Servo motor rotation direction, speed and rotating number .
. Brake function, operation limit function and protection function.</td></tr>
<tr><td colspan="2">(3) Servo motor connected to load and controlled by a host controller.</td></tr>
<tr><td>A. Servo drive wiring and motor installation</td><td>B. Purpose of trial run</td></tr>
<tr><td> 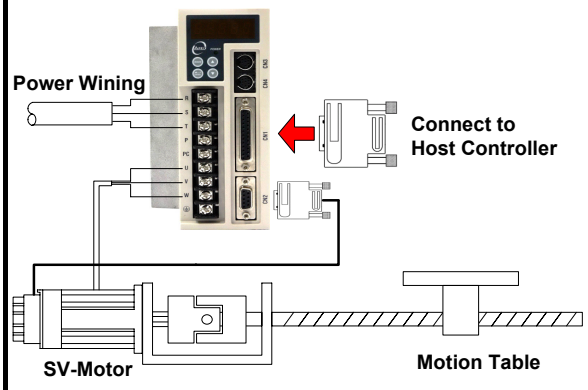
</td><td>Confirm if the items below are correct:
. Servo motor rotation direction, speed and mechanical operation range.
. Set related control parameters.</td></tr>
</table>

4-1 Trial Operation Servo motor without Load

To carry out a successful trial run follow the steps below and ensure that drive wiring is correct and as specified.

Warning!

In order to prevent potential damage,prior to trial run ensure that the driven mechanism, couplings and belts etc are disconnected from the motor.

1. **Installation of servo motor.**
   Ensure that the motor is installed securely so that there is no movement and vibration during trial run.
2. **Wiring.**
   Check servo drive, motor power connections and motor encoder connection.
   No control signal wiring is required of this stage thus remove connector (CN1) from the servo drive.
3. **Servo drive power.**
   Apply power to servo drive. If the display shows any Alarm message such as graph below then refer to Alarm contents of chapter 8 to identify the cause.

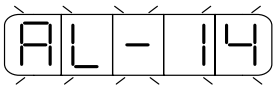

AL-14 is caused by Input terminals **CCWL (Counter clockwise Limit)** and **CWL (Clockwise Limit)** being activated at the same time.
See (the default setting of high or low input logic state according to the description in section 5-6-1).
Because of the alarm, the servo can not operate normally.
Set the parameter **Cn002.1=1** to disable the drive limit function temporarily during trial run period.

Steps for setting parameter Cn002.1 (CCWL &CWL Rotation limit selection).

Setp	Keys	LED Display	Description
1	Power on		On" power on " **Drive Status** is displayed.
2		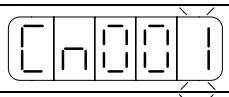	Press **MODE-Key** 4 times to display Cn001.
3		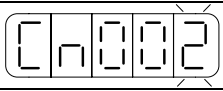	Press **INCREMENT-Key** once to display Cn002.
4		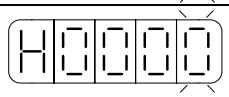	Press **ENTER-Key** for 2 secs to display the preset value of Cn002. Note: Cn 002 includes 4 digits corresponding to Cn002.0,Cn002.1,Cn002.2 & Cn002.3.
5		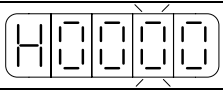	Press ENTER-Key once to move to the 2nd digit for (Cn 002.1).
6		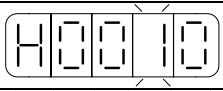	Press **INCREMENT- Key** once to adjust the 2nd digit to 1. Disable the function of external limits CCWL and CWL.
7		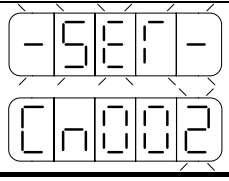	To save the setting value by Press the **ENTER- Key** for 2 seconds until **"SET"**is displayed briefly and then display is returned to parameter Cn-002.

After accomplish these steps, reset the power. If there are any other alarms then refer to section **8-2 (Clearing Alarms)**. Once there is no alarms then operate the drive again. If any of the alarms can not be cleared, please contact your local supplier for assistance.

4. Mechanical Brake Release.

When a brake type servo motor is used then must release the brake before starting trial run by applying 24vdc voltage to brake terminals.

5. Keypad Trial run (JOG function).

Jog function can be used to check if motor speed and rotation direction is correct. Parameters Sn 201(internal speed command 1) and Cn004 (motor rotation direction selection) Can be used to set the required speed and direction.

Warning!

Set the required JOG speed before the trial run otherwise the motor will run at the default speed set in parameter Sn201(internal speed command 1).

Warning!

Regardless of external SON (servo on) is active of not, Servo motor will get excitation as soon as JOG is activated.

Steps for setting JOG function:

Step	Keys	LED Display	Description
1	Power on	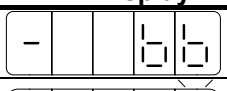	On" power on " **Drive Status** is displayed.
2		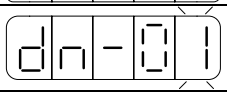	Press **MODE-Key** twice to view diagnostics parameter dn-01.
3		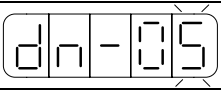	Press **INCREMENT-Key** 4 times to display dn-5.
4		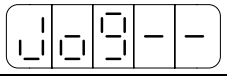	Press **ENTER-Key** for 2 seconds to enter **JOG MODE.** Motor will power on immediately.
5		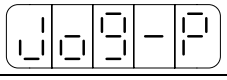	Press **INCREMENT-Key,** motor will run in the pre-defined positive direction.
6		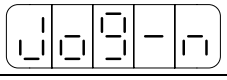	Press DECREMENT-Key, motor will run in the pre-defined negative direction.
7		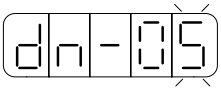	Press **MODE-Key** once to return to dn-05 and parameter selection. Motor power will be turned off immediately.

4-2 Trial Operation for Servo motor without Load from Host Reference

Check and ensure that all power connections to the drive and motor and control signal connection between the host controller and the drive are correct.Motor must be mechanically disconnected from the load.

Following section describes the trial run when using a host controller such as a PLC.

Two trial runs have been discussed. Speed control mode (Section B) and Position control mode (Section C).

Section A shows the connections and SON signal (servo on) requirements for both trial runs.

A. Launching Servo motor

Example wiring diagram:

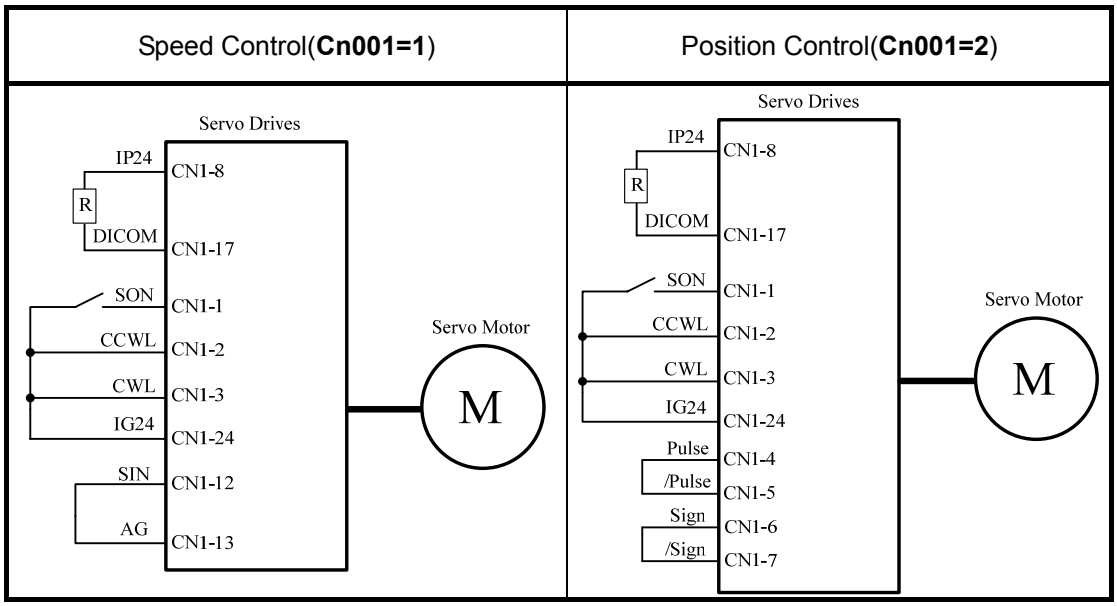

a. Disable Analog Input command terminals.

Speed control mode: Link analog input terminal SIN to 0V terminal (AG).

Position control mode: Link external pulse command terminals “Pulse” to ”/Pulse” and “Sign” to “/Sign”.

b. **Enable Servo ON Signal**

Connect **SON** terminal to IG 24 (0V) terminal (Digital Ground).

On drive power up servo will be turned on. Now check for any Alarms. If any alarms then refer to Chapter 8-2 for how to reset the Alarms.

B. Trial run in Speed control mode(Cn001=1).

1. Wiring check:

Check and ensure that all power cable and control signal connections are correct as shown below.

To be able to adjust the speed for test connect a potentiometer between terminals SIN (analog input voltage) and AG (Analog Ground). Set the analog input voltage to 0V. (No speed reference).

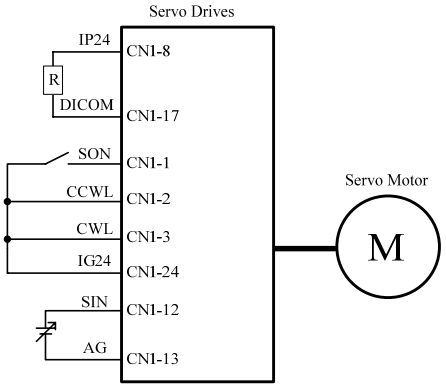

2. Apply Servo on.

Apply power to the drive and activate (**SON**) signal by switching SON terminal to IG24 (input digital Ground).

If the motor rotates slowly, while the speed analog input voltage is 0 volts

then use **dn-07** function to auto offset adjustment for the analog input value. (refer to **section 3-2-2**).

3. Check the relationship between motor speed and the analog input speed command.

Increase the analog speed input voltage gradually (by potentiometer) and monitor the actual motor speed by parameter **Un0-01.**

Check if motor rotation direction is correct and if necessary set it by parameter **Cn004**.

Check for correctness of analog speed command ratio in relation to the preset in parameter (**Sn216**) and analog speed command limit as set in parameter (**Sn218**).

Finally, switch off **SON signal** (turn off the servo motor).

4. Connection with a host controller.

Check and ensure that the wiring for the servo drive and host controller, speed analog signal input (**SIN**), and encoder output (**PA, /PA, PB, /PB, PZ, /PZ**) are all correct and according to the diagram below:

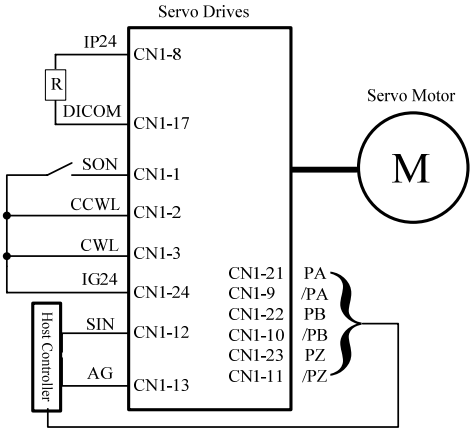

5. Confirm the rotation number and encoder output of Servo Motor.

Use parameter Un-14 to check if the Motor feed back (number of revolutions) per minute is correct and the same as number of revolutions sent by the host controller.

If there is any difference then check and make sure that parameter Cn005 (Encoder ppr) is set correctly.

Once this is complete remove SON signal to switch off power to the motor.

C. Position control mode trial run (Cn001=2).

1. Wiring:

Check and ensure that all power connections to the drive and motor and control signal connections are correct as diagram below.

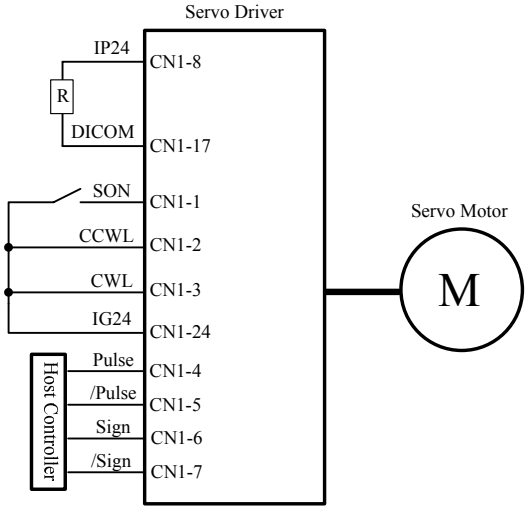

2. Setting electronic gear ratio.

Set electronic gear ratio parameters Pn302~Pn306 as required for the positioning application. (refer to section 5-4-3).

Note: Electronic gear ratio parameter can be used to scale the command output pulse.
This would be useful in transmission applications where move distance per move command pulse has to be scaled due to mechanical requirements.

3. Apply Servo on.

Apply power to the drive and activate (**SON**) signal by switching SON terminal to IG24 (input digital Ground).

4. Confirm motor speed, direction and number of revolutions.

Apply a low-speed pulse command from the host controller to the servo drive so that the servo motor operates at low-speed.

Compare the number of pulses per revolution from parameters **Un-15** (motor feed back pulse ppr) and **Un-17** (Input command ppr) these should be the same.

Compare the number of revolutions using parameters Un-14 (motor feed back rotation number) and Un-16 (pulse command rotation number) these should be the same.

If there are differences then adjust electronic gear ratio parameters **Pn302~Pn306** as required and test again until the result is satisfactory.

If the direction of motor rotation is incorrect then check and if necessary set parameter Pn 301.0 (position pulse command types).

Also check and if necessary set parameter **Pn314** (Position command direction selection).

Once the test result is correct then remove SON signal. (Power to the motor is switched off).

4-3 Trial Operation with the Servo motor Connected to the Machine

Warning

Servo drive parameters must be set correctly otherwise damage to machinery and potential injury may result.
Do not close to the machine after temporary power loss, the machine may restart unexpected.

Please take the measures highlighted in the section below before trial run with load.

Consider the Mechanical system requirements and set the parameters appropriate for control by the host controller.

Ensure that the rotation direction and speed are suitable for the Mechanical system.

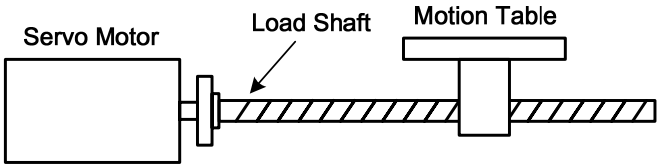

Steps required for Trial run.

1. **Ensure that the ServoDrive Power is off.**
2. **Connect the servo motor to the load shaft.**
   Refer to Chapter 1-5 to check the installation guidelines for the servo motor.
3. **Gain adjustment for the servo control loop.**
   Refer to Chapter 5-5 for details.
4. **Trial run with a host controller.**
   Run command is to be signaled by the host controller.
   Refer to Chapter 4-2 to choose the required trial run mode (Speed control or position control modes) according to the application and set and adjust the parameters if necessary for the application.
5. **Repeat adjusting and record the set parameter values.**
   Repeat steps 3 and 4 until the mechanical system is operating satisfactorily then record the Gain value and the parameters changes for the future use.

Chapter 5 Control Functions

5-1 Control Mode Selection

There are three control modes in the servo drive, torque, speed and position modes can be selected individually or as a combination according to the selection table below:

Parameter	Setting	Description	Default	Unit	Setting Range	Control Mode
★Cn001	0	**Torque control** To use one analog voltage command signal to control torque. Please refer to **5-2**.	2	X	0 ~ 6	ALL
	1	**Speed control** Input contacts **SPD1** and **SPD2** can be used to select 4 -steps of speed. Please refer to section **5-3-1**.				
	2	**Position control (External pulse command)** Four separate selectable pulse command types are possible to control position. Please refer to section **5-4-1.**				
	3	**Position / Speed control switch** Input contact **MDC** can be used to switch between position & speed control. Please refer to section **5-6-2**.				
	4	**Speed / Torque control switch** Input contact **MDC** can be used to switch between speed & torque control. Please refer to section **5-6-2**.				
	5	**Position / Torque control switch** Input contact **MDC** can be used to switch between position & torque control. Please refer to **section 5-6-2**.				
	6	**Position control (internal position command)** Input contacts **POS 1~POS 4** can be used to select 16 programmable preset position commands to control position. Please refer to **5-4-2**.				

New setting will become effective after re-cycling the power.

5-2 Torque mode

Torque mode is used in applications such as printing machines, coil wiring machines, injection molding machines and specific application that requiring torque control.

Diagram below shows the torque control process diagram.

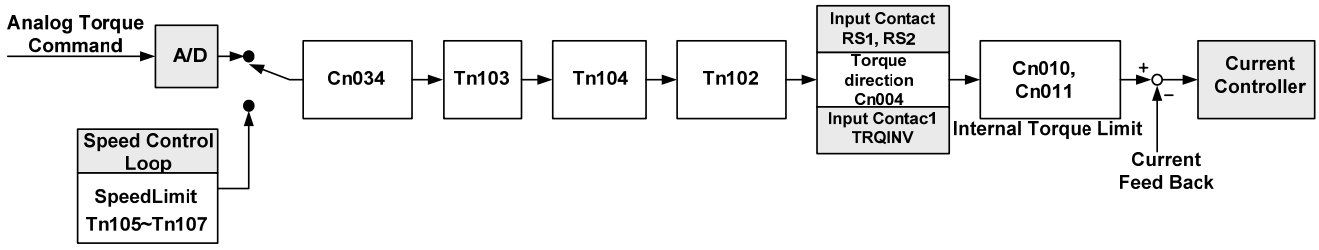

Analog voltage torque command is applied to the drive input terminals as shown below:

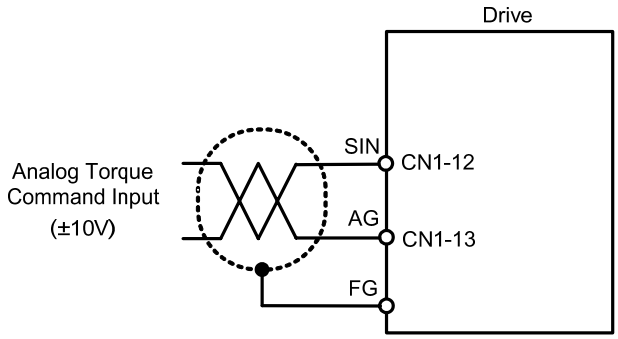

Caution!

Care should be taken in selection of required torque direction CW/CCW.

Please refer to Chapter 5-2-4.

5-2-1 Analog Torque command Ratio.

Analog torque command ratio can be used to adjust the relationship between

Input voltage torque command and actual torque command.

Parameter	Name	Default	Unit	Setting range	Control Mode
Tn103	Analog torque command ratio Slope of voltage command / Torque command can be adjusted.	300	%/10V	0~300	T

Setting example: refer to the following diagram.

1. With Tn103 set to 300, a torque command input voltage of 10V, corresponds to 300% of rated torque. For input voltage of 5V, actual torque command will be 150% of rated torque.
2. With Tn03 set to 200 , a torque command input voltage of 10V, corresponds to 200% of rated torque. For input voltage of 5V, actual torque command will be 100%.

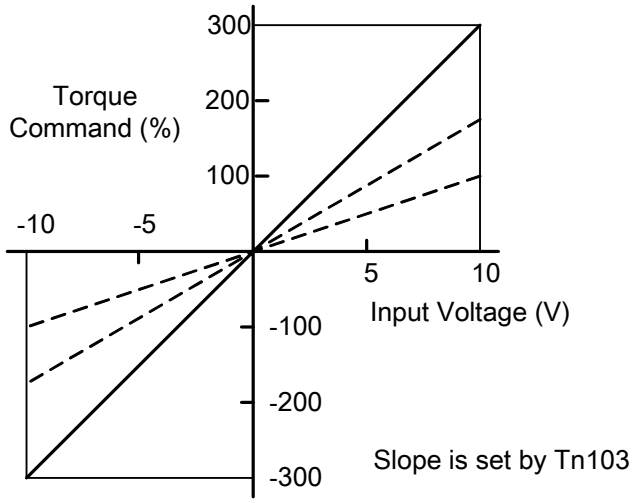

5-2-2 Adjusting the analog torque command offset

For a torque command of 0V, motor could possibly be rotating slowly.

To rectify this effect by adjust offset value in parameter **Tn104** or use auto offset adjust feature.

(Please refer to section **3-2-2**).

Note : To check and set the offset to zero, insert a link between analog torque command contact SIN(CN1-26) and analog ground contact AG (CN1-29).

Parameter	Name	Default	Unit	Setting range	Control mode
Tn104	Analog torque command offset The offset amount can be adjusted by this parameter.	0	mV	-10000~10000	T

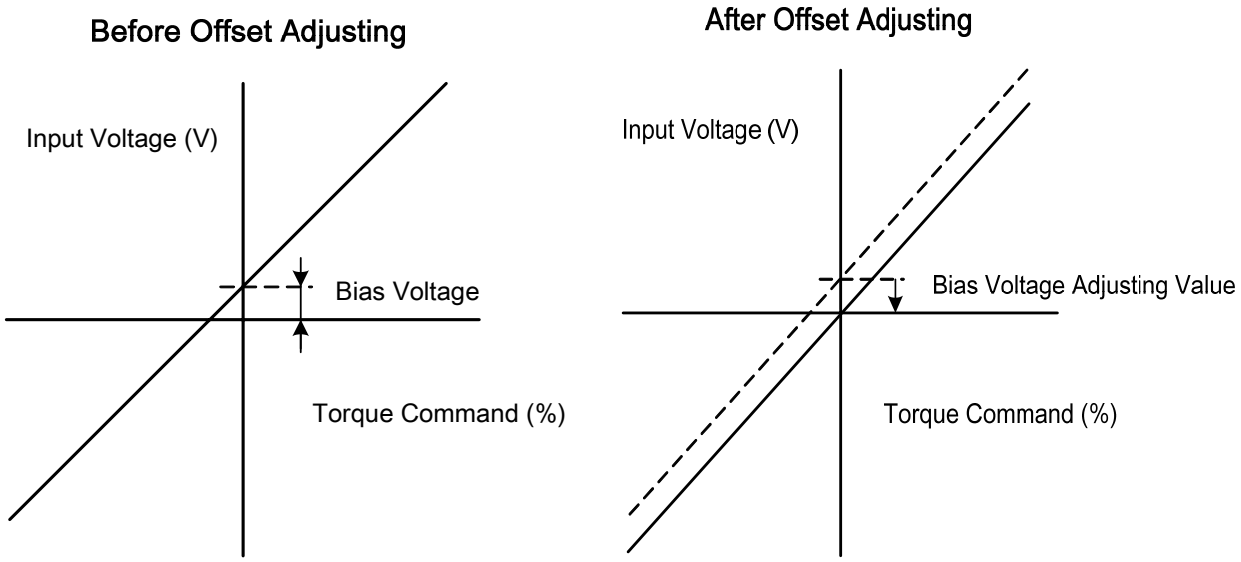

5-2-3 Torque command linear acceleration and deceleration

A smooth torque command can be achieved by enabling acceleration/Deceleration parameter **Tn101**.

Parameter	Name		Default	Unit	Setting Range	Control mode
★Tn101	Linear acceleration/ deceleration method		0	X	0 | 1	T
	Setting	Explanation				
	0	Disabled.				
	1	Enabled.				

Torque command acceleration/deceleration time,

is the time taken for the torque to rise from zero to the required level by Tn102.

As per diagram below:-

Parameter	Name	Default	Unit	Setting Range	Control mode
★Tn102	Linear acceleration /deceleration time period Time taken for the torque-command to linearly accelerate to the rated torque level or Decelerate to zero torque .	1	msec	1~50000	T

New setting will become effective after re-cycling the power.

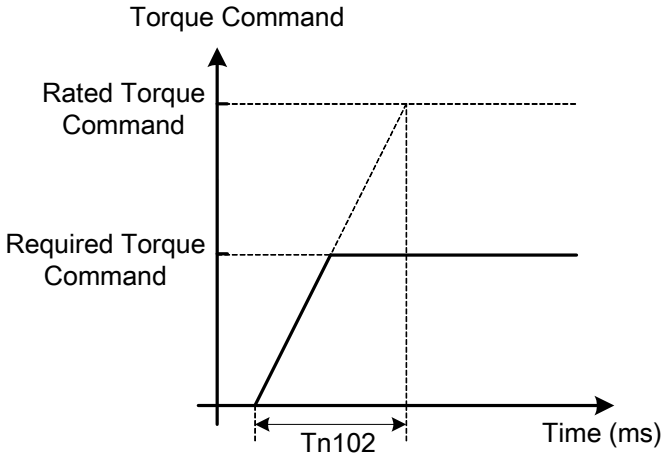

Setting examples:

(1) To achieve 50% of rated torque output in 10msec:

$$\mathrm{Tn102} = 10(\mathrm{msec}) \times \frac{100\%}{50\%} = 20(\mathrm{msec})$$

(2) To achieve 75% of rated torque output in 10msec:

$$\mathrm{Tn102} = 10(\mathrm{msec}) \times \frac{100\%}{75\%} = 13(\mathrm{msec})$$

5-2-4 Definition of torque direction

In torque mode, torque direction can be defined by one of the following three methods.

(1) Input contacts **RS1**, **RS2.** (torque command CW/CCW selectable by programmable input)

(2) Parameter **Cn004.** (motor rotation direction)

(3) Input contact **TRQINV.** (reverse torque command)

Caution !

All 3 methods can be active at the same time.

User must ensure that correct selections are made for these three selections.

Input Contact		Description	Control mode
RS2	RS1		
0	0	Zero torque	T
0	1	Rotation in the current torque command direction	
1	0	Reverse the current torque command direction	
1	1	Zero torque	

Note: RS2 and RS1 contact status “1” (ON) and “0” (OFF).

Please check 5-6-1 to set the required high /Low signal levels (PNP/NPN) .

<table>
<tr><th>Parameter</th><th colspan="3">Name</th><th>Default</th><th>Unit</th><th>Setting Range</th><th>Control mode</th></tr>
<tr><td rowspan="6">Cn004</td><td colspan="3">Motor rotate direction.(Inspect from the load side)
 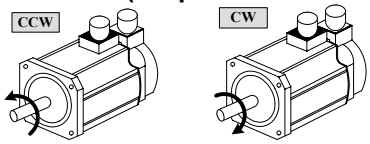

When Torque or Speed Command value is Positive, the setting of Motor retation direction are:</td><td rowspan="6">0</td><td rowspan="6">X</td><td rowspan="6">0
|
3</td><td rowspan="6">S
T</td></tr>
<tr><td rowspan="2">Setting</td><td colspan="2">Explanation</td></tr>
<tr><td>Explanation</td><td>Explanation</td></tr>
<tr><td>0</td><td>Counter ClockWise (CCW)</td><td>Counter ClockWise (CCW)</td></tr>
<tr><td>1</td><td>ClockWise (CW)</td><td>Counter ClockWise (CCW)</td></tr>
<tr><td>2</td><td>Counter ClockWise (CCW)</td><td>ClockWise (CW)</td></tr>
<tr><td>3</td><td>ClockWise (CW)</td><td>ClockWise (CW)</td></tr>
</table>

Input contact TRQINV	Description	Control mode
0	Rotation in current torque command direction	T
1	Reverse torque command direction	

Note: Input contacts status “1” (ON) and “0” (OFF).

Please refer to 5-6-1 to set the required high /Low signal levels (PNP/NPN) selection.

5-2-5 Internal Torque Limit

In torque Control mode, user can set internal torque limit values as required.

Set as below:-

Parameter	Name	Default	Unit	Setting range	Control mode
Cn010	CCW Torque command limit Ex: For a torque limit in CCW direction which is twice the rated torque , set Cn10=200.	300	%	0~300	ALL
Cn011	CW Torque command limit Ex: For a torque limit in CW direction which is twice the rated torque , set Cn11=-200.	-300	%	-300~0	ALL

5-2-6 Limiting Servomotor Speed during Torque Control

In torque control, input contacts SPD1 and SPD2 can be used for selecting one of the two methods below for setting speed limits.

(1) External Analog command (Default) Signal is applied to terminals PIC & AG (pins 27& 29 on CN1)

(2) Selection of Three presentable Limits (Tn105~Tn107) according to the table below.

Caution! For achieving smooth speed response please refer to section 5-3-6.

Input contact SPD2	Input contact SPD1	Speed limit command	Control mode
0	0	External analog command **PIC(CN1-25)**	T
0	1	Internal speed limit1 **Tn105**	
1	0	Internal speed limit2 **Tn106**	
1	1	Internal speed limit3 **Tn107**	

Note: Input contacts status “1” (ON) and “0” (OFF).

Please check 5-6-1 to set the required high /Low signal levels (PNP/NPN) selection.

Below is the external analog speed limit command wiring diagram:

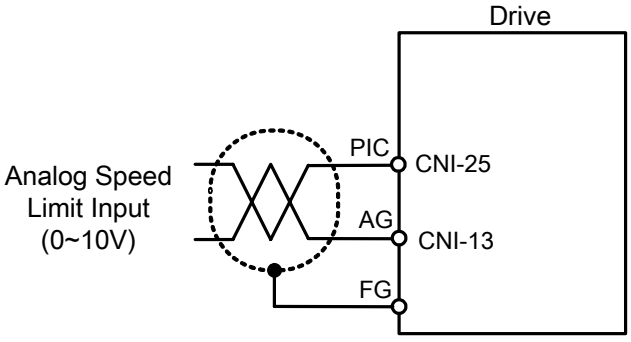

Internal presentable speed limit parameters for torque control mode are listed below:

These preset limits apply to both CW & CCW directions.

<table>
<tr><th>Parameter</th><th>Name</th><th>Default</th><th>Unit</th><th>Setting range</th><th>Control mode</th></tr>
<tr><td>Tn105</td><td>Preset Speed Limit 1
In Torque control, input contacts SPD1 and SPD2 can be used to select Preset speed limit 1. As follows:
<table><tr><th>Input Contact SPD2</th><th>Input Contact SPD1</th></tr><tr><td>0</td><td>1</td></tr></table>Note: Input contacts status “1” (ON) and “0” (OFF).
Refer to 5-6-1 to set high or low input logic levels.</td><td>100</td><td>rpm</td><td>0~3000</td><td>T</td></tr>
<tr><td>Tn106</td><td>Preset Speed Limit 2
In Torque control, input contacts SPD1 and SPD2 can be used to select Preset speed limit 2. As follows:
<table><tr><th>Input Contact SPD2</th><th>Input Contact SPD1</th></tr><tr><td>1</td><td>0</td></tr></table>Note: Input contacts status “1” (ON) and “0” (OFF)
Refer to 5-6-1 to set high or low input logic levels.</td><td>200</td><td>rpm</td><td>0~3000</td><td>T</td></tr>
<tr><td>Tn107</td><td>Preset Speed Limit 3
In Torque control, input contacts SPD1 and SPD2 can be used to select Preset speed limit 3. As follows:
<table><tr><th>Input Contact SPD2</th><th>Input Contact SPD1</th></tr><tr><td>1</td><td>1</td></tr></table>Note: Input contacts status “1” (ON) and “0” (OFF)
Refer to 5-6-1 to set high or low input logic levels.</td><td>300</td><td>rpm</td><td>0~3000</td><td>T</td></tr>
</table>

P.S also refer to page 6-11 for detail.

5-2-7 Additional torque control functions

Torque Output Monitor

When the torque level in CW or CCW directions becomes greater than the value set in **Tn108** (torque level monitor value), the output contact **INT** is active.

Parameter	Name	Default	Unit	Setting range	Control mode
Tn108	Torque output monitor value When the torque level in CW or CCW direction become greater then this value setting, the output contact INT is active.	100	%	0~300	ALL

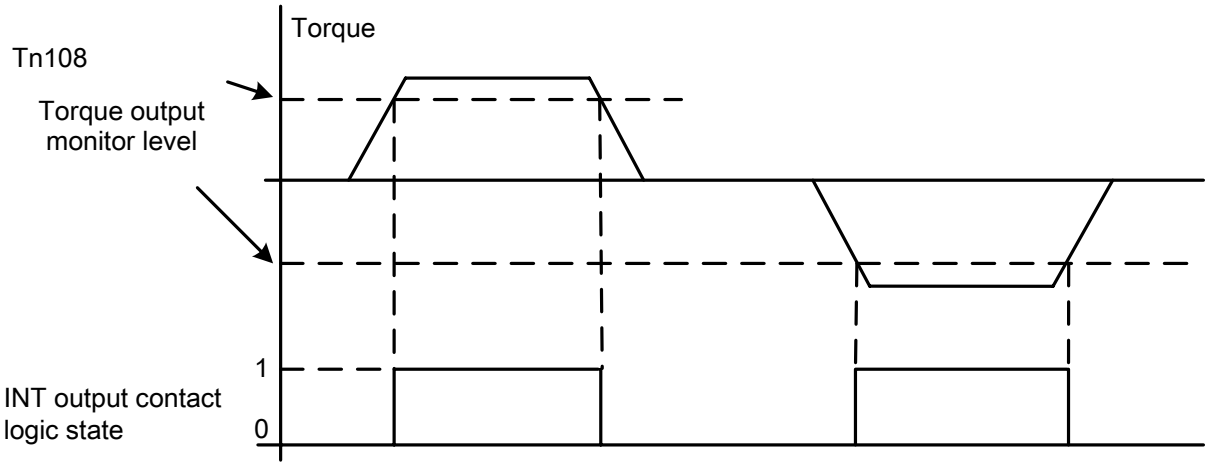

Note: Input contacts status “1” (ON) and “0” (OFF).

Please check 5-6-1 to set the required high /Low signal levels (PNP/NPN) selection.

Torque Smoothing Filter

Torque vibration can be diminution by setting an appropriate value in Cn034 (Torque command smoothing filter), In the other hand, this will cause a delay in the response time of the torque loop.

Parameter	Name	Default	Unit	Setting range	Control mode
Cn034	Torque command smoothing filter Restrain sharp vibration noise by the setting and this filter delay the time of servo response.	0	Hz	0~1000	ALL

5-3 Speed Mode

Speed Mode is necessary for applications that require precisely speed control, such as weaving, drilling and CNC type machines.Diagrams below shows the speed control system in two parts.

First stage shows **Speed processing and conditioning** and the second stage shows the **Speed controller** With PI/P control modes, and controller1&2 selection and interface with torque control stage.

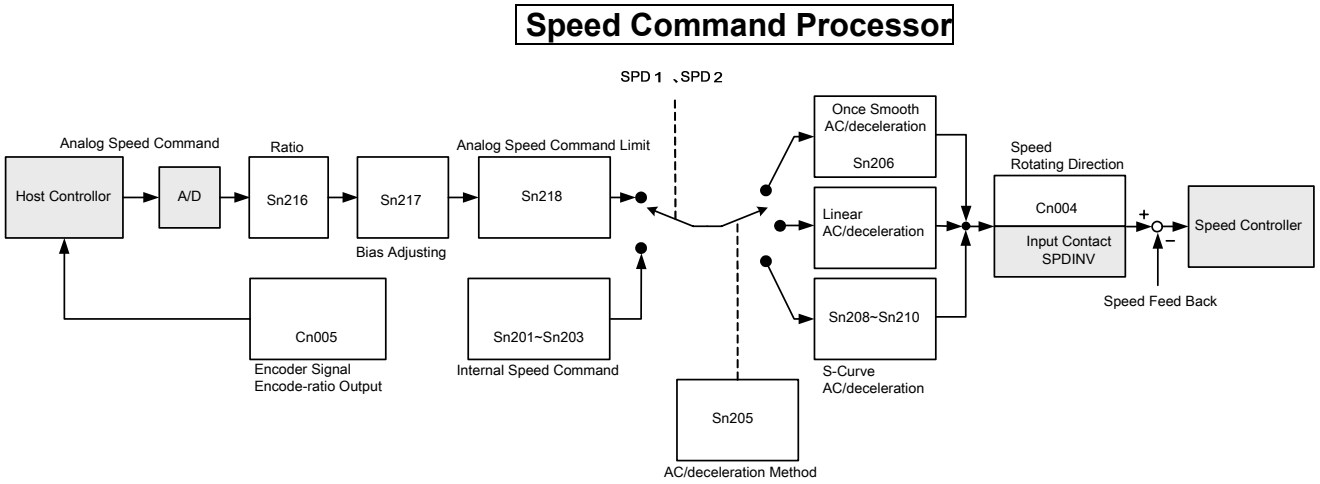

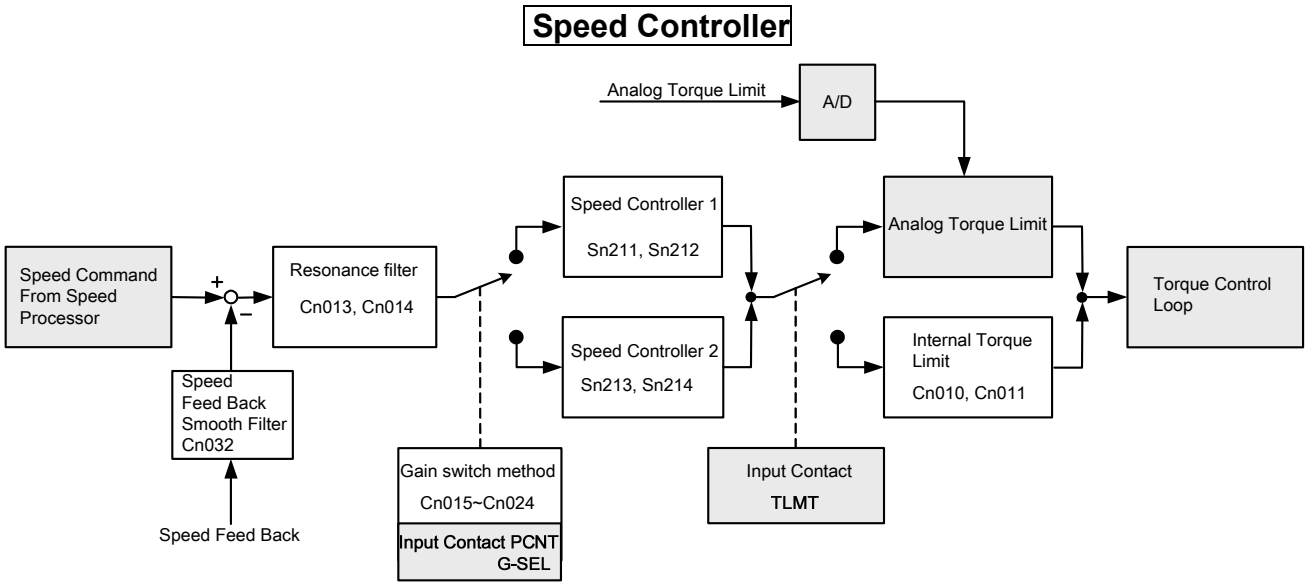

5-3-1 Selection for speed command

In Speed control, input contacts SPD1 and SPD2 can be used for selecting one of the two methods below for setting speed limits.

(1) External Analog command (Default) : Analog signal is input from terminals SIN & AG (pins 12& 13 on CN1)

(2) Internal speed command: Selection of Three presentable Limits according to the table below.

.

Input Contact SPD2	Input Contact SPD1	Speed Command	Control Mode
0	0	External analog command **SIN(CN1-12)**	S
0	1	Internal speed command 1 **Sn201**	
1	0	Internal speed command 2 **Sn202**	
1	1	Internal speed command 3 **Sn203**	

Note: Input contacts status “1” (ON) and “0” (OFF).

Please check 5-6-1 to set the required high /Low signal levels (PNP/NPN) selection.

Diagram below shows the external analog speed command wiring:

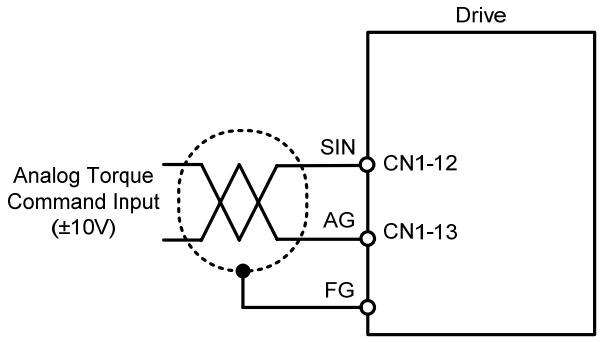

Internal presetable speed limit parameters for speed command mode are listed below:

These preset limits apply to both CW & CCW directions.

Parameter	Name	Default	Unit	Setting range	Control mode
Sn201	Internal speed command 1	100	rpm	-3000~3000	S
Sn202	Internal speed command 2	200			
Sn203	Internal speed command 3	300			

5-3-2 Analog speed command Ratio

Analog speed command ratio can be used to adjust the relationship between Input voltage speed command and actual speed command.

Parameter	Name	Default	Unit	Setting range	Control mode
Sn216	Analog speed command ratio Slope of voltage command / Speed command can be adjusted.	3000	rpm/10V	100~4500	S

Setting Example:

(1) With **Sn216 set to** 3000, a speed command input voltage of 10V, corresponds to 3000rpm; for an input voltage of 5V speed command will be 1500rpm.

(2) With **Sn216** set to 2000, a speed command input voltage of 10V, corresponds to 2000rpm, for an input voltage of 5 volts speed command will be 1000rpm.

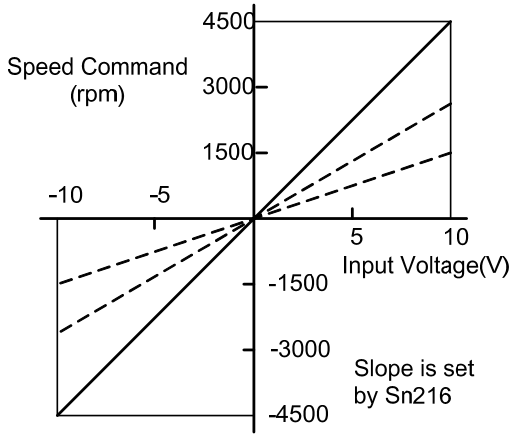

5-3-3 Adjusting the analog reference offset

For a speed command of 0V, motor could possibly be rotating slowly.

To rectify this effect by adjusting offset value manually in parameter S**n217** or use auto offset adjust feature. (Please refer to section **3-2-2**).

Note : To check and set the offset to zero, insert a link between analog torque command contact SIN(CN1-12) and analog ground contact AG (CN1-13).

Parameter	Name	Default	Unit	Setting range	Control mode
Sn217	Analog speed command offset adjust The offset amount can be adjusted by this parameter.	0	mV	-10000~ 10000	S

Refer to the following diagrams:

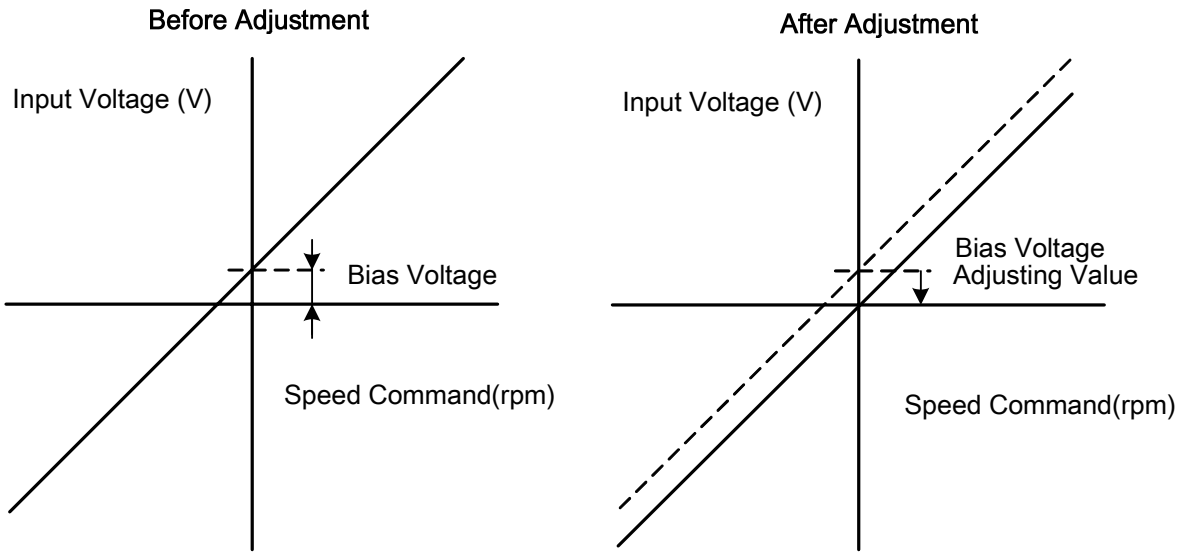

5-3-4 Analog reference for speed command limit

A maximum limit for analog speed can be set by Sn218.

Parameter	Name	Default	Unit	Setting range	Control mode
Sn218	Analog speed command limit Setting Sn218 for limit the highest speed command of analog input.	Rate rpm x 1.02	rpm	100~4500	S

5-3-5 Encoder Signal Output

Servo motor encoder pulse signal can be output to a host controller to establish an external control loop.

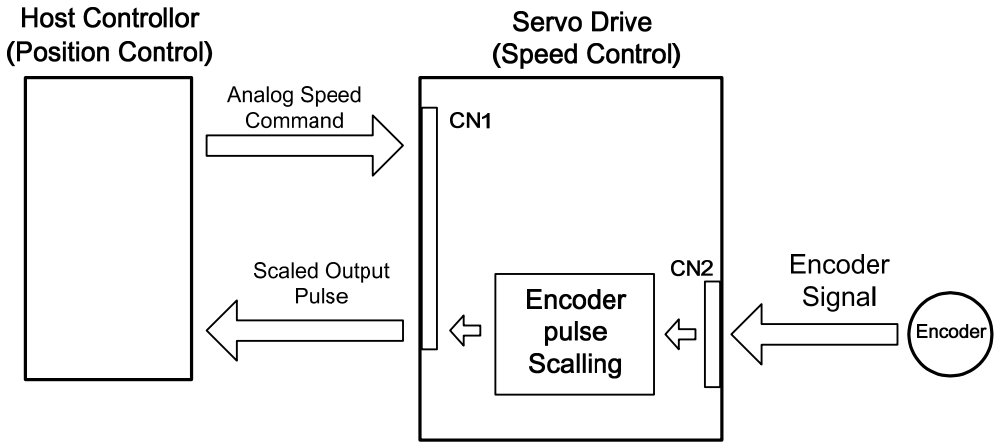

Set the required encoder Pulse Per Revolution (PPR) in parameter Cn005.

Default output value is the actual encoder PPR.

Parameter	Name	Default	Unit	Setting range	Control mode
★Cn005	Encoder pulse output scale For default set to the rated encoder number of pulses per revolution, such as 2500ppr. Encoder ppr can be scaled by setting a ppr in the range of 1 to the rated ppr of the encoder for scaling purpose. ***PPR = Pulse per revolution.*** **Ex:encorder rated precision is 2000 ppr, If you setting Cn005 =2, the output is 1000ppr.**	1	X	1 | 63	ALL

New setting will become effective after re-cycling the power.

Encoder pulse output terminal description:

Pin	Name	Pin NO. of CN1	Control mode
PA	Encoder pulse output A Phase signal	CN1-21	ALL
/PA	Encoder pulse output /A Phase signal	CN1-09	
PB	Encoder pulse output B Phase signal	CN1-22	
/PB	Encoder pulse output /B Phase signal	CN1-10	
PZ	Encoder pulse output Z Phase signal	CN1-23	
/PZ	Encoder pulse output /Z Phase signal	CN1-11	

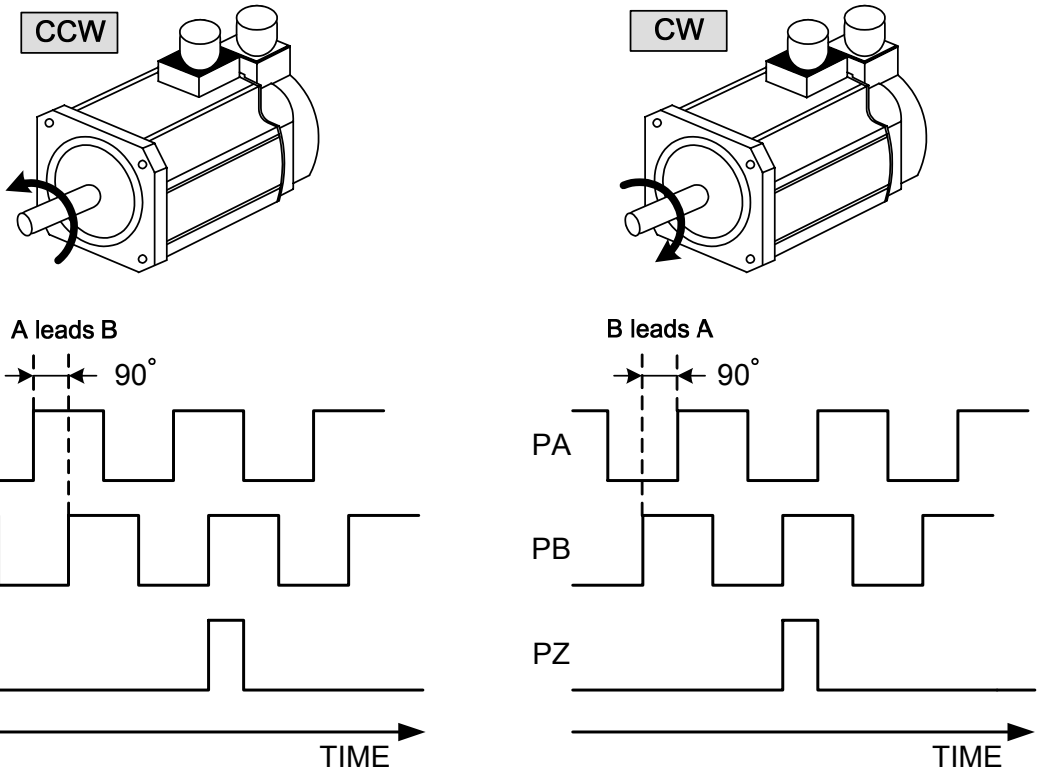

5-3-6 Smoothing the speed command

Sn205 can be used to eliminate speed overshoot and motor vibration by selecting one of the acceleration /deceleration methods which is suitable for the application from the table below.

Parameter	Name		Default	Unit	Setting Range	Control mode
Sn205	Speed command accel/decel smooth method.		0	X	0 | 3	S
	Setting	Explanation				
	0	Disable this function.				
	1	Smooth Acceleration/deceleration according to the curve defined by Sn206.				
	2	Linear accel/decel time constant .Defined by Sn207				
	3	S curve for Acceleration/deceleration. Defined by Sn208.				

Above three methods of Acceleration/deceleration are described below.

(1)Speed command smooth ac/deceleration:

Set **Sn205=**1 to enable the use of speed command smooth acceleration/deceleration function.

Parameter	Name	Default	Unit	Setting range	Control mode
Sn206	Speed command smooth accel/decel time Constant	1	msec	1~10000	S
	Set **Sn205=1** to enable this function then set the time period for the speed to rise to 63.2% of the full speed.				

Smooth acceleration/deceleration time corresponds to the time in which the speed command increases from 0 to 63.2% as shown in diagram below.

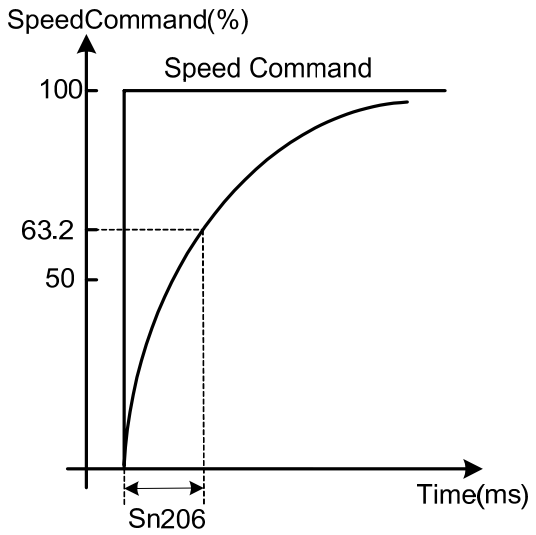

Setting example:

(1) To achieve 95% of speed command output in 30msec:

$$\text{Set}\ \ Sn206 = \frac{30(\text{msec})}{-\ln(1-95\%)} = 10(\text{msec})$$

(2) To achieve 75% of speed command output in 30msec:

$$\text{Set}\ \ Sn206 = \frac{30(\text{msec})}{-\ln(1-75\%)} = 22(\text{msec})$$

ln= Natural log

(2)Speed command linear acceleration/deceleration function:

Set **Sn205=2** to enable the use of speed command linear acceleration/deceleration function.

Parameter	Name	Default	Unit	Setting range	Control mode
Sn207	Speed command linear accel/decel time constant Set **Sn205**=2 to enable this function then set the time period for the speed to rise linearly to full speed.	1	msec	1~50000	S

Linear acceleration/deceleration time corresponds to the time in which the speed increases (linearly) from zero to the rated speed. As shown in the diagram below.

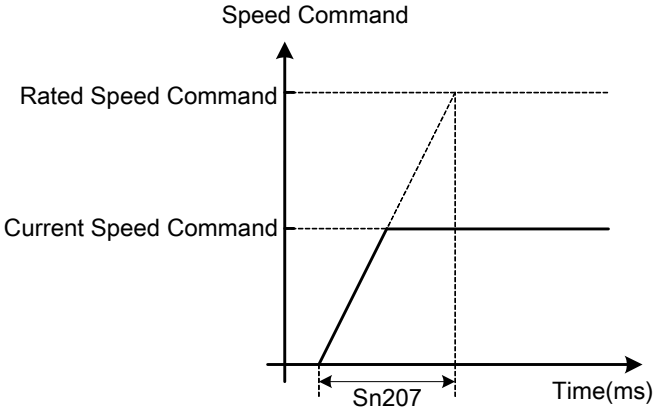

Setting examples:

(1) To achieve 50% of rated speed output in 10msec:

$$\text{Set}\ \ Sn207 = 10(\text{msec}) \times \frac{100\%}{50\%} = 20(\text{msec})$$

(2) To achieve 75% of rated speed output in 10msec:

$$\text{Set}\ \ Sn207 = 10(\text{msec}) \times \frac{100\%}{75\%} = 13(\text{msec})$$

S-Curve Speed Command Acceleration/Deceleration:

Set **Sn205=3** to enable the use of S-Curve speed command ac/deceleration function.

Parameter	Name	Default	Unit	Setting range	Control mode
Sn208	S-Curve speed command accel/decel time setting Set **Sn205=3 to enable this function.** In the period of Accel. and Decel. , drastic speed changing might cause vibration of machine. S curve speed command Accel. and Decel. time setting has the effect to smooth Accel. and Decel. curve. **Rule for the setting :** $\frac{t_a}{2} > t_s$, $\frac{t_d}{2} > t_s$	1	msec	1~1000	S
Sn209	S-Curve speed command acceleration time setting Refer **Sn208**	200	msec	0~5000	S
Sn210	S-Curve speed command deceleration time setting Refer **Sn208**	200	msec	0~5000	S

In applications where normal acceleration/deceleration on ramp up or ramp down bring in vibration of the mechanical

system. S- curve acceleration/deceleration parameters could help to reduce vibration as diagram below:

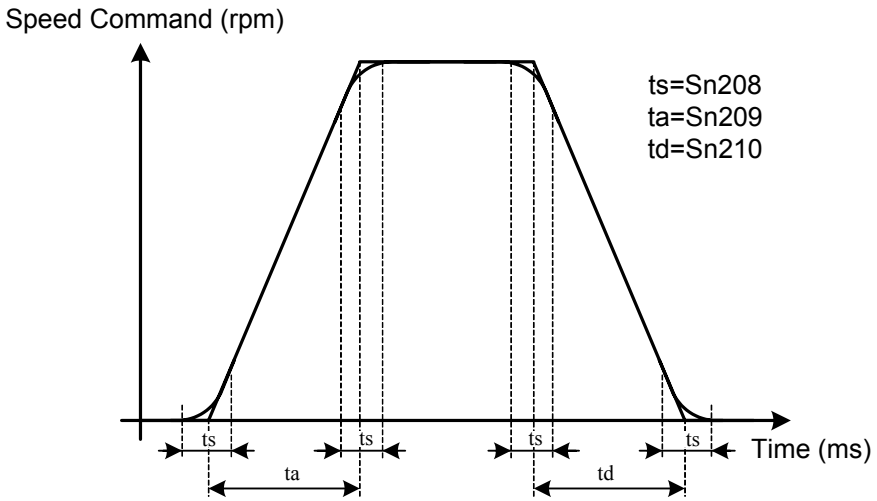

Caution! Setting Rule: $\frac{t_a}{2} > t_s$, $\frac{t_d}{2} > t_s$

5-3-7 Setting rotation direction

Motor rotation direction in speed mode can be set by parameter **Cn004 (Motor rotation direction)**and input contact **SPDINV** according to the tables below.

Caution!

Both methods can be operated at the same time.

Ensure that these parameters are set correctly for the required direction.

<table>
<tr><th>Parameter</th><th colspan="3">Name</th><th>Default</th><th>Unit</th><th>Setting Range</th><th>Control mode</th></tr>
<tr><td rowspan="7">Cn004</td><td colspan="3">Motor rotation direction (observation from load side).
 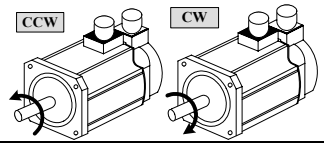
</td><td rowspan="7">0</td><td rowspan="7">X</td><td rowspan="7">0
|
3</td><td rowspan="7">S/T</td></tr>
<tr><td rowspan="2">setting</td><td colspan="2">Explanation</td></tr>
<tr><td>Torque control</td><td>Speed control</td></tr>
<tr><td>0</td><td>Counter Colckwise (CCW)</td><td>Counter Colckwise (CCW)</td></tr>
<tr><td>1</td><td>Colckwise (CW)</td><td>Counter Colckwise (CCW)</td></tr>
<tr><td>2</td><td>Counter Colckwise (CCW)</td><td>Colckwise (CW)</td></tr>
<tr><td>3</td><td>Colckwise (CW)</td><td>Colckwise (CW)</td></tr>
</table>

Input contact SPDINV	Description	Control mode
0	Rotation by speed command direction.	S
1	Rotation by reverse speed command direction.	

Note: Input contacts status “1” (ON) and “0” (OFF).

Please check 5-6-1 to set the required high /Low signal levels (PNP/NPN) selection.

5-3-8 Speed Loop Gain

In speed mode there are two speed controller loops,

with separate Gain (P) and Integral (I) functions.

Speed controllers 1 or 2 can be selected by setting one of the multi- function input terminals,

to selection G-SEL or by setting one of the parameters Cn20-Cn24 as required.

Please refer to section 5-3-11 section B for more details.

Parameter	Name	Default	Unit	Setting range	Control mode
Sn211	Speed loop gain 1 Speed loop gain has a direct effect on the frequency response bandwidth of the Speed-control loop. Without causing vibration or noise Speed-loop-gain can be increased to obtain a faster speed response. If **Cn025 (load Inertia ratio)** is set correctly, the speed-loop-bandwidth will equal to speed-loop-gain.	40	Hz	10~450	Pi Pe S
Sn212	Speed loop integral time 1 Speed loop integral element can eliminate the steady speed error and quick response for speed variations. Decreasing Integral time can improve system rigidity. The formula below shows the relationship between Integral time and Speed loop Gain. $SpeedLoopIntegrationTimeCons\tan t \geq 5\times\frac{1}{2\pi\times SpeedLoopGain}$	100	x0.2 ms	1~500	Pi Pe S
Sn213	Speed loop gain 2 Refer to **Sn211**	40	Hz	10~450	Pi Pe S
Sn214	Speed loop integral time constant 2 Refer to **Sn212**	100	x0.2 ms	1~500	Pi Pe S

Diagram below shows the speed controller.

Setting a high speed loop gain or a lower speed loop integral time provides a faster speed control response time.

For more details refer to section **5-5**.

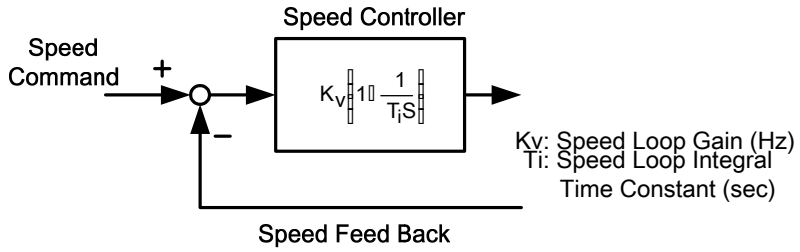

5-3-9 Notch Filter

The function of the Notch filter is to suppress mechanical system resonance.

Resonance occurs due to low mechanical system rigidity (high springiness) of transmission systems used with servo motors such as couplings, bearings, lead screws, etc.

Enter the mechanical system vibration (resonance frequency) in parameter Cn013 (Notch Filter frequency) and adjust Cn014 to set the filter bandwidth scaling factor.

Lower the setting of Cn014 value, wider is the notch filter frequency bandwidth. The adjustment required depends on the application.

Caution!

If Cn013 is set to "0" the Notch filter is disabled.

Parameter	Name	Default	Unit	Setting range	Control mode
Cn013	**Frequency of resonance Filter (Notch Filter).** Enter the vibration frequency in Cn013, to eliminate system mechanical vibration.	0	Hz	0~1000	Pi/Pe/S
Cn014	**Band Width of the Resonance Filter.** Adjusting the band width of the frequency, lower the band width value in **Cn014**, restrain frequency Band width will be wider.	7	X	1~100	Pi/Pe/S

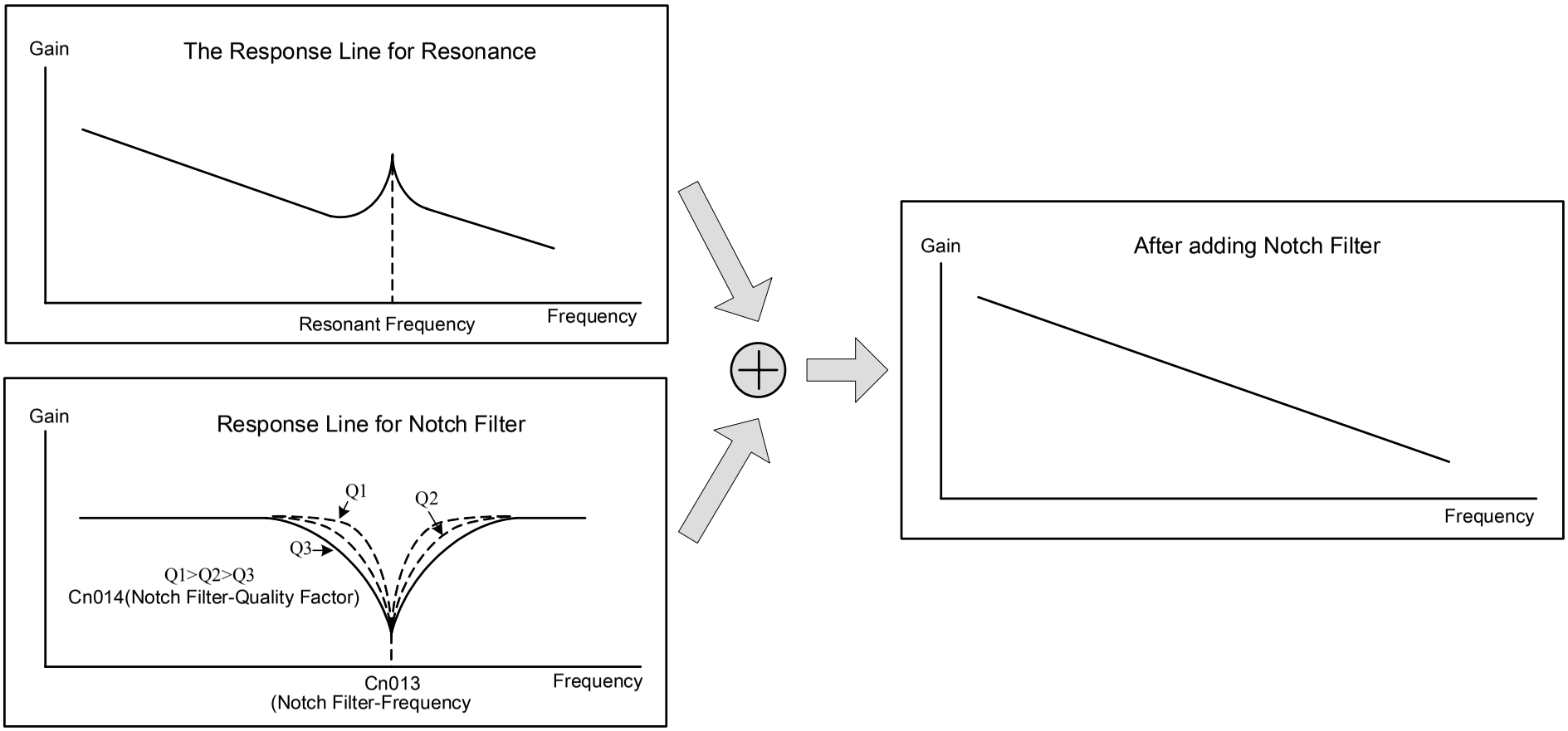
Gain
The Response Line for Resonance
Resonant Frequency
Frequency
Gain
Response Line for Notch Filter
Q1
Q2
Q3
Q1>Q2>Q3
Cn014(Notch Filter-Quality Factor)
Cn013
(Notch Filter-Frequency
Frequency
Gain
After adding Notch Filter
Frequency

5-3-10 Torque limit of speed control mode

In speed mode, the motor torque limit input contact **TLMT** could be used to select one of the two methods below:

(1) Internal toque limit: Using default **Cn010** (CCW Torque command limit) and **Cn011**(CW Torque command limit).

(2) External analog command: Using two separate analog voltage command signals at input terminals **PIC(CN1-27)** to limit CCW torque and **NIC(CN1-28)** to limit CW torque.
As shown in the table below:

Input contact TLMT	CCW torque command limit source	CW torque command limit source	Control mode
0	**Cn010**	**Cn011**	ALL
1	External analog command **PIC(CN1-25)**	External analog command **PIC(CN1-25)**	Pi/Pe/S

Note: Input contacts status “1” (ON) and “0” (OFF).
Please check 5-6-1 to set the required high /Low signal levels (PNP/NPN) selection.

Caution!

To use external analog torque command limit , If analog torque command limit is greater than internal torque command limit, the internal torque command limit has the priority over external analog torque command limit.

Internal Torque command limit is set as below.

Parameter	Name	Default	Unit	Setting range	Control mode
Cn010	CCW torque command limit Ex: For a torque limit in CCW direction which is twice the rated torque , set Cn10=200.	300	%	0~300	ALL
Cn011	CW torque command limit Ex: For a torque limit in CW direction which is twice the rated torque , set Cn11=-200.	-300	%	-300~0	ALL

The diagram below shows the external analog torque limit command wiring:

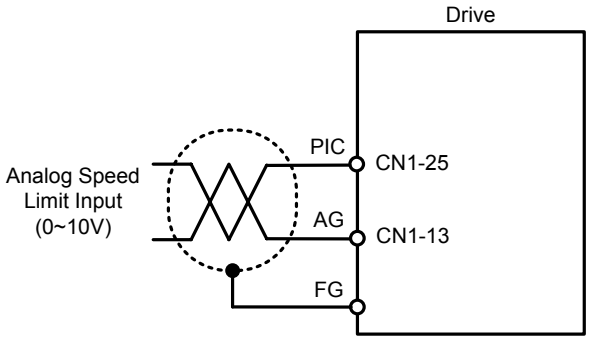

5-3-11 Gain Switched

PI/P control mode selection (Section A)

Automatic gain 1& 2 switch (Section B)

The selection of **PI/P control mode switch** and **Automatic gain 1 & 2 switch** by parameters or from input terminals can be used in following conditions.

(1) In speed control, to restrain acceleration/deceleration overshooting.

(2) In position control, to restrain oscillations and decrease the adjusting time.

(3) To decrease the possible noise caused by using Servo Lock function.

(A) Switching between PI/P Control modes

Switch over from PI to P mode is determined by setting of parameter Cn015.0 and according to the selection options below:

Parameter	Name		Default	Unit	Setting Range	Control mode
Cn015.0 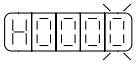	**PI/P control switch mode.**		4	X	0 | 4	Pi/Pe/S
	Setting	**Description**				
	0	Switch from PI to P if the ***torque*** command is greater than **Cn016**				
	1	Switch from PI to P if the ***speed*** command is greater than **Cn017**				
	2	Switch from PI to P if the ***acceleration*** command is greater than **Cn018**				
	3	Switch from PI to P if the ***position error*** is greater than **Cn019**				
	4	Switch from PI to P by the input contact ***PCNT***. Set one of the multi function terminals to option 03.				

Parameter	Name	Default	Unit	Setting range	Control mode
Cn016	PI/P control mode switch by torque command Set the **Cn015.0=0** first. If Torque Command is less than Cn016, PI control is selected. If Torque Command is greater than Cn016, P control is selected.	200	%	0~399	Pi/Pe/S
Cn017	PI/P control mode switch by speed command Set the **Cn015.0=1 first.** If Speed Command is less than **Cn017,** PI control is selected. If Speed Command is greater than **Cn017,** P control is selected.	0	rpm	0~4500	Pi/Pe/S
Cn018	PI/P control mode switch by acceleration Set the **Cn015.0=2 first.** If Acceleration is less than **Cn018,** PI control is selected. If Acceleration is greater than **Cn018,** P control is selected.	0	rps/s	0~18750	Pi/Pe/S
Cn019	PI/P control mode switch by position error value Set the **Cn015.0=3 first**. If Position error value is less than **Cn019** PI control is selected. If Position error value is greater than **Cn019** P control is selected.	0	pulse	0~50000	Pi/Pe/S

(1) PI to P mode switch over by comparing *Torque command.*

When the ***Torque command*** is less than **Cn016** PI control is selected.

When the ***Torque command*** is greater than **Cn016** P control is selected.

As shown in diagram below:

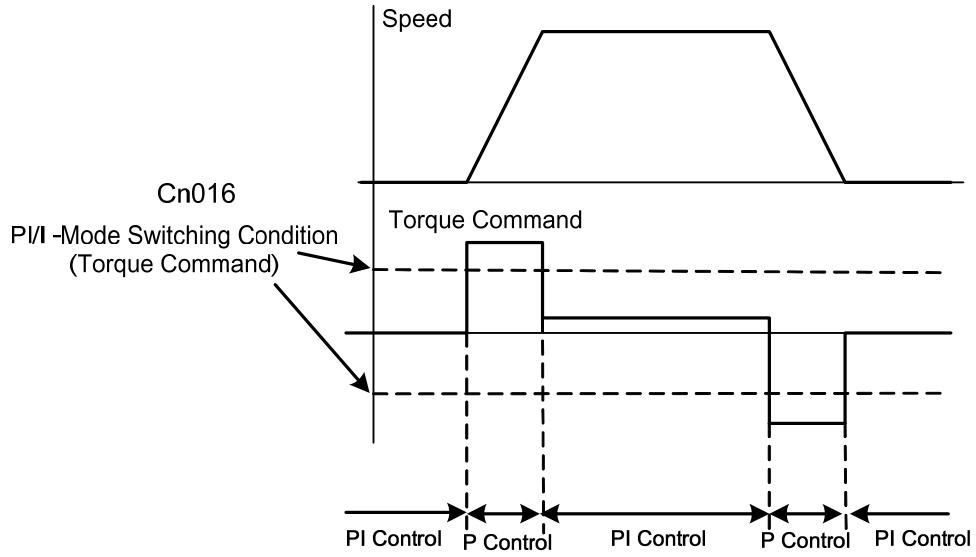

(2) **PI to P mode switch over by comparing *Speed command*.**

When the ***Speed command*** is **less** than **Cn017** PI control is selected.

When the ***Speed command*** is **greater** than **Cn017** P control is selected.

As shown in diagram below:

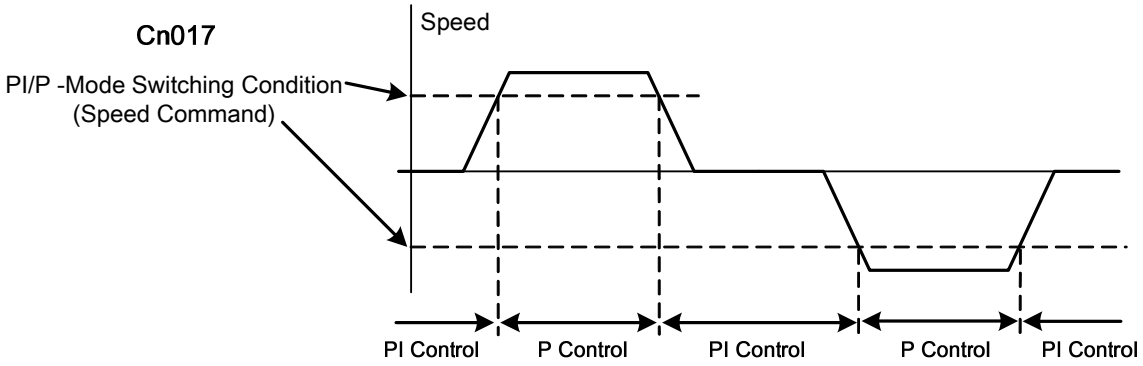

(3) **PI to P mode switch over by comparing *Acceleration command*.**

When the ***Acceleration command*** is **less** than **Cn018** PI control is selected.

When the ***Acceleration command*** is **greater** than **Cn018** P control is selected.

As shown in diagram below:

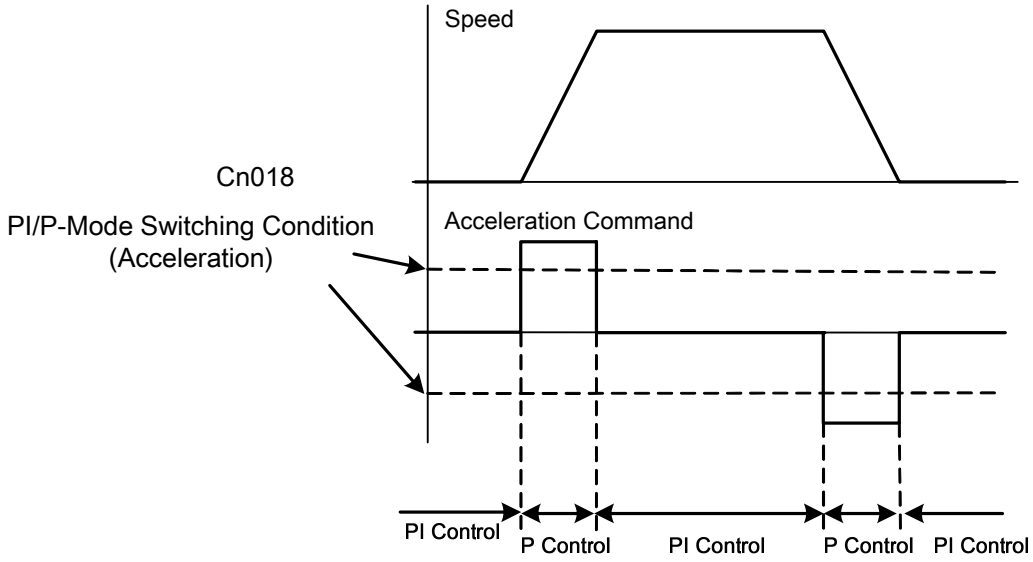

(4) **PI to P mode switch over by comparing *Position Error value*.**

When the ***Position Error value*** is **less** than **Cn019** PI control is selected.

When the ***Position Error value*** is greater than **Cn019** P control is selected.

As shown in diagram below:

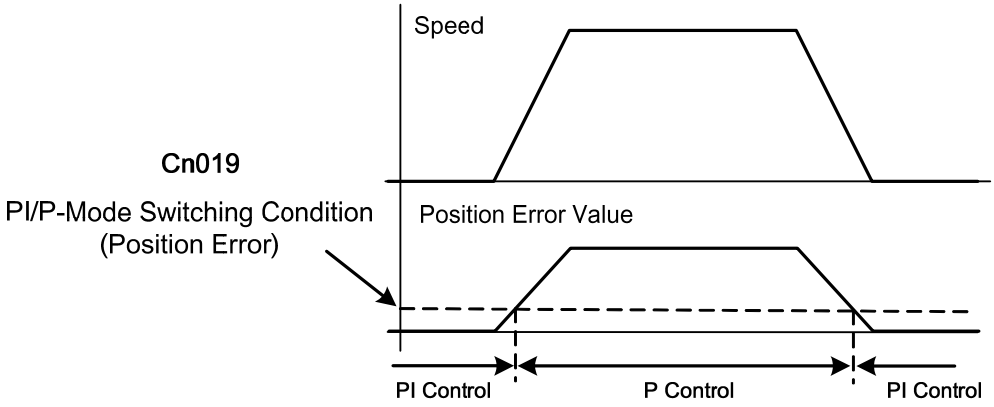

(5) PI to P mode switch over by PCNT input contact.

When the **PCNT input contact *is open*** PI control is selected.

When the **PCNT input contact *is closed*** P control is selected.

Note: Input contacts status “1” (ON) and “0” (OFF).

Please check 5-6-1 to set the required high /Low signal levels (PNP/NPN) selection.

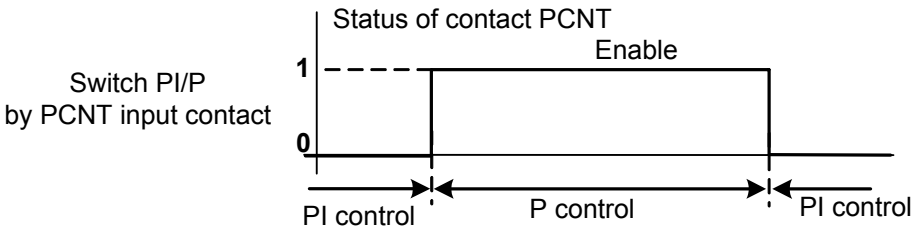

(B) Automatic gain 1& 2 switching

Selection of **Automatic gain 1& 2 switch** with different ***P&I Gains*** is possible by setting Parameter Cn 015.1 to one of the selections listed in the table below.

Parameter Cn 020 can be use for setting a switch delay time between different gains. (Gain 1 and 2)

Parameter	Name	Default	Unit	Setting Range	Control Mode
Cn015.1	**Automatic gain 1& 2 switch** Setting: Explanation 0: Switch from gain 1 to 2 if ***torque*** command is greater than **Cn021.** 1: Switch from gain 1 to 2 if **speed** command is greater than **Cn022.** 2: Switch from gain 1 to 2 if ***acceleration*** command is greater than **Cn023.** 3: Switch from gain 1to2 if ***position error*** value is greater than **Cn024.** 4: Switch from gain 1 to 2 by input contact **G-SEL.** Set one of the multi function terminals to option 15 of Hn501.	4	X	0 | 4	Pi/Pe/S
Cn020	Automatic gain 1& 2 switch delay time. Speed loop 2 to speed loop 1, Change over delay, when two control speed loops (P&I gains 1 & 2) are used.	0	x0.2 msec	0~10000	Pi/Pe/S
Cn021	Automatic gain 1& 2 switch condition***(torque command)*** Set **Cn015.1=0 first.** When torque command is less than **Cn021**, Gain 1 is selected. When torque command is greater than **Cn021,** Gain 2 is selected When **Gain 2** is active and torque command becomes less than **Cn021** setting value**,** system will automatically switch back to **Gain 1** switch time delay can be set by Cn020.	200	%	0~399	Pi/Pe/S
Cn022	Automatic gain 1& 2 switch condition ***(speed command)*** Set the **Cn015.1=1 first.** When speed command is less than Cn022 Gain 1 is selected. When speed command is greater than Cn022 Gain 2 is selected. When **Gain 2** is active and speed command becomes less than **Cn022** setting value**,** system will automatically switch back to **Gain 1** the switch time delay can be set by Cn020.	0	rpm	0~4500	Pi/Pe/S
Cn023	Automatic gain 1& 2 switch condition ***(acceleration command)*** Set **Cn015.1=2** first. When acceleration command is less than Cn023 Gain 1 is selected. When acceleration command is greater than Cn023 Gain 2 is selected. When **Gain 2** is active and acceleration command becomes less than **Cn023** system will automatically switch back to **Gain 1** the switch time delay can be set by Cn020.	0	rps/s	0~18750	Pi/Pe/S
Cn024	Automatic gain 1& 2 switch condition ***(position error value)*** Set **Cn015.1=3** first. When position error value is less than Cn024 Gain 1 is selected. When position error value is greater than Cn024 Gain 2 is selected. When **Gain 2** is active and position error value becomes less than **Cn024** system will automatically switch back to **Gain 1** and the switch time delay can be set by Cn020.	0	pulse	0~50000	Pi/Pe/S

Note: Gain 1 : is consisted of **Pn310** (position loop gain 1), **Sn211** (speed loop gain 1) and **Sn212** (Speed loop integral time 1).

Gain 2 : is consisted of **Pn311** (position loop gain 2), **Sn213** (speed loop gain 2) and **Sn214** (Speed loop integral time 2).

(1) Automatic gain 1&2 switch condition (by *torque command*).

When torque command is less than **Cn021**, Gain 1 is selected.

When torque command is greater than **Cn021**, Gain 2 is selected

When **Gain 2** is active and torque command becomes less than **Cn021** system will automatically switch back to **Gain 1** the switch time delay can be set by Cn020.

As show in the diagram below:

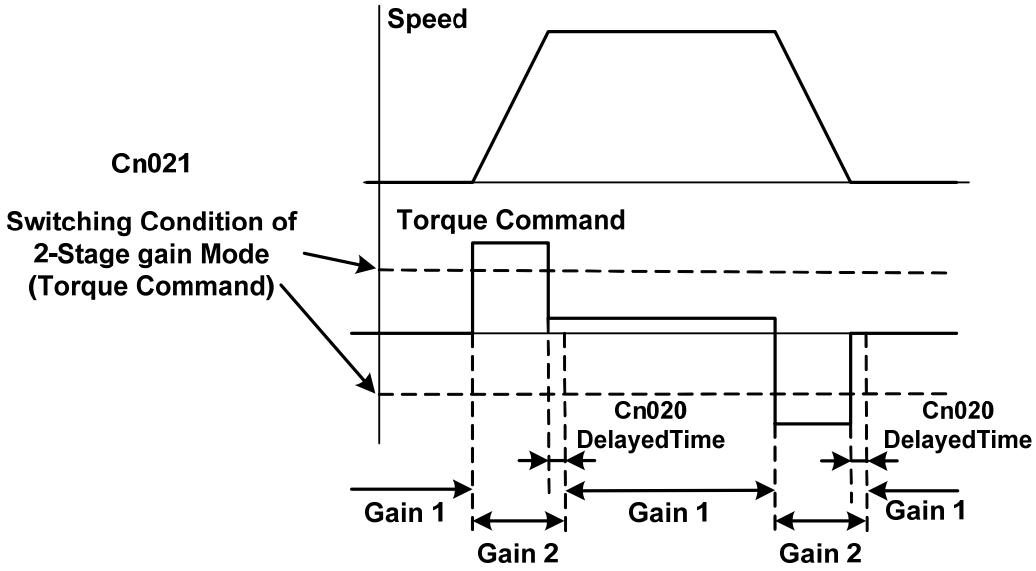

(2) Automatic gain 1&2 switch condition (by Speed *command*).

When speed command is less than Cn022 Gain 1 is selected.

When speed command is greater than Cn022 Gain 2 is selected.

When **Gain 2** is active and speed command becomes less than **Cn022** system will automatically switch back to **Gain 1** the switch time delay can be set by Cn020.

As show in the diagram below :

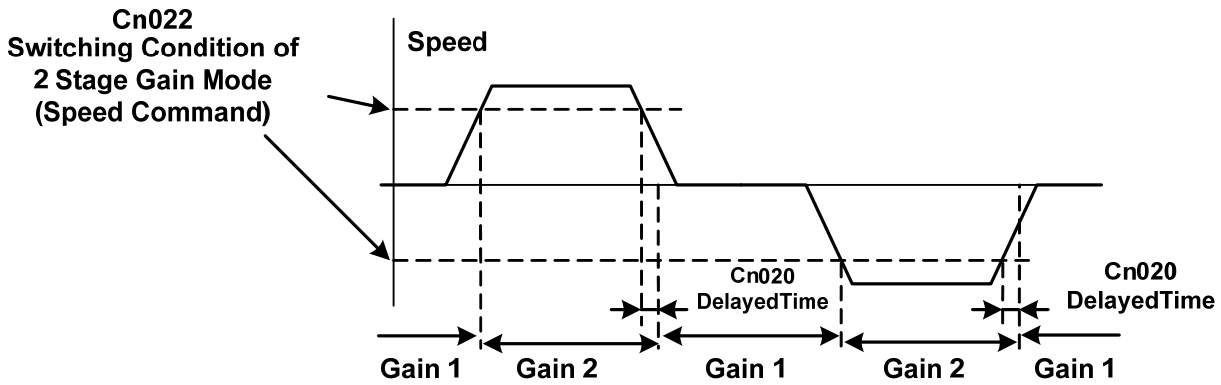

(3) Automatic gain 1&2 switch condition (by Acceleration *command*).

When acceleration command is less than Cn023 Gain 1 is selected.

When acceleration command is greater than Cn023 Gain 2 is selected.

When **Gain 2** is active and acceleration command becomes less than **Cn023** system will automatically switch back to **Gain 1** the switch time delay can be set by Cn020.

As show in the diagram below:

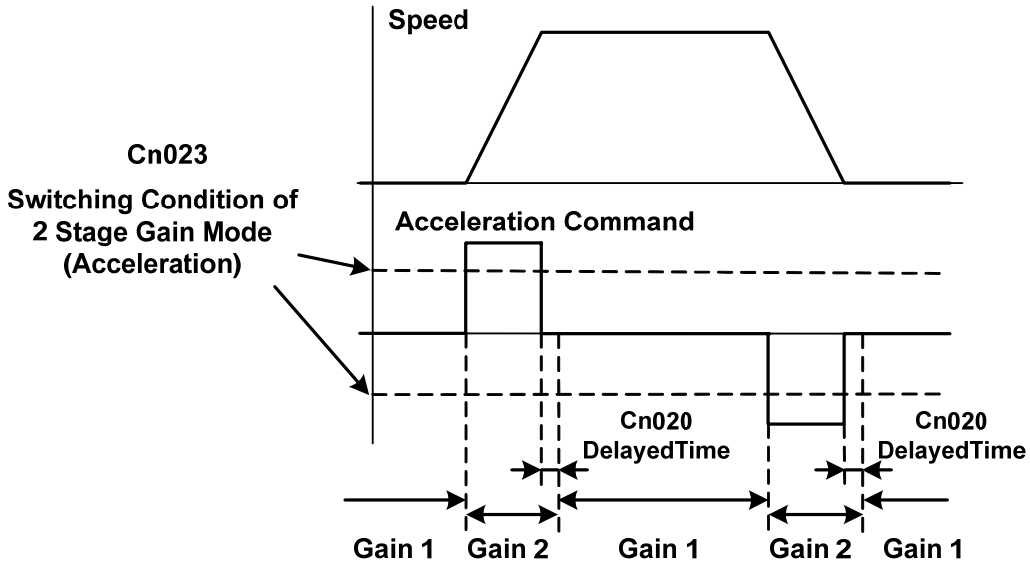

(4) Automatic gain 1&2 switch condition (by Position error value).

When position error value is less than Cn024 Gain 1 is selected.

When position error value is greater than Cn024 Gain 2 is selected.

When **Gain 2** is active and position error value becomes less than **Cn024** system will automatically switch back to **Gain 1** and the switch time delay can be set by Cn020.

As show in the diagram below :

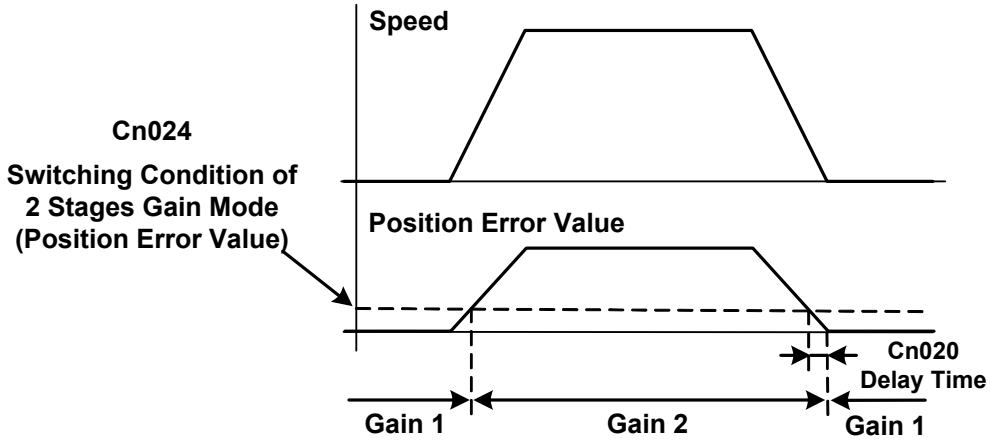

(5) Automatic gain 1&2 switch condition by G-SEL input contact.

When the G-SEL input contact is open Gain 1 is selected.

When G-SEL input contact is closed Gain 2 is selected.

When G-SEL input contact opens again then Gain 1 is selected and switch delay time can be set by Cn20.

As show in the diagram below:

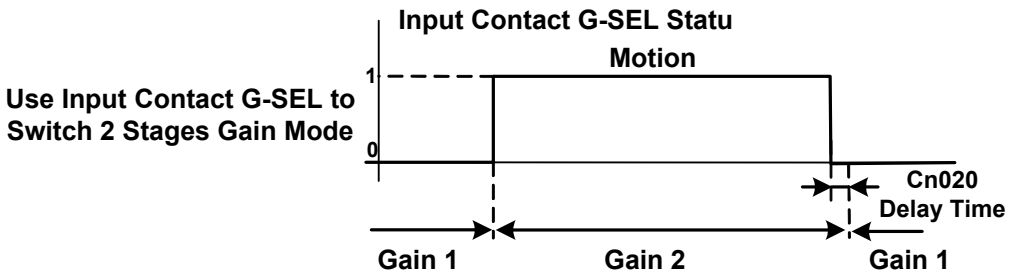

Note: Input contacts status “1” (ON) and “0” (OFF).

Please refer to 5-6-1 for setting required high /Low signal levels (PNP/NPN) selection.

5-3-12 Other Functions

When the speed level in CW or CCW directions becomes greater than the value set in **Cn007** (Speed reached preset), the output contact **INS** operates.

Speed reached preset

Parameter Signal	Name	Default	Unit	Setting Range	Control Mode
Cn007	Speed reached preset Speed preset level for **CW** or **CCW** rotation. When the speed is greater then preset level in Cn007 the Speed reached output signal INS will be activated	Rated rpm × 1/3	rpm	0~4500	S/T

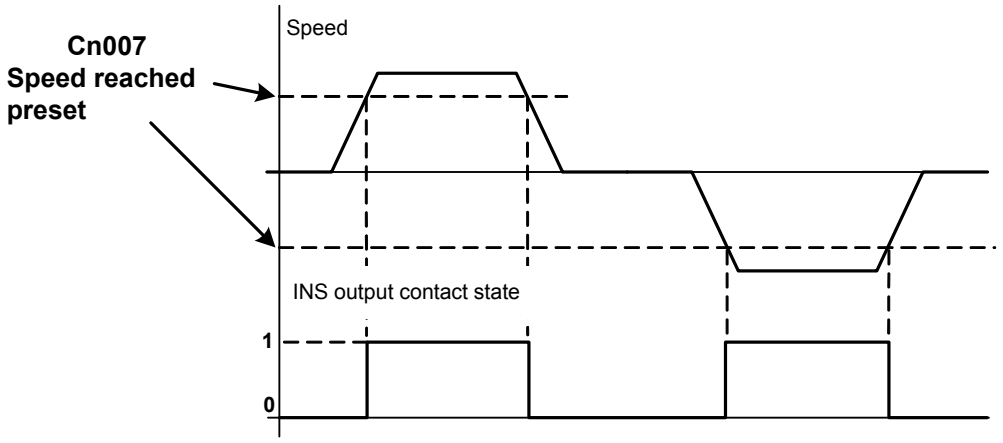

Note: Input contacts status “1” (ON) and “0” (OFF).

Please check section 5-6-1 to set the required high /Low signal levels (PNP/NPN) selection.

Zero Speed preset

When the speed is less than the speed set in Sn215 (Value of ZS), the output contact **ZS** operates.

Parameter Signal	Name	Default	Unit	Setting Range	Control Mode
Sn215	Value of zero speed Set the zero speed range in Sn215 When the actual speed is lower than **Sn215** value, Output contact **ZS** is activated.	50	rpm	0~4500	S

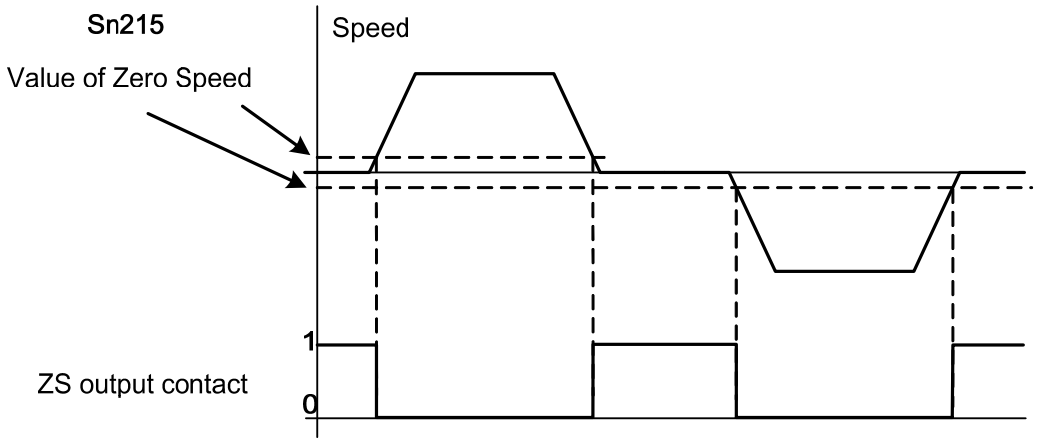

Note: Input contacts status “1” (ON) and “0” (OFF)

Please check section 5-6-1 to set the required high /Low signal levels (PNP/NPN) selection.

To Zero the speed command according to preset level in Sn215 set Sn204 to selection 1.

Parameter Signal	Name		Default	Unit	Setting Range	Control Mode
Sn204	Zero Speed selection Enable		0	X	0 | 1	S
	Setting	Description				
	0	No action				
	1	Set the preset value in Sn215 as zero speed.				

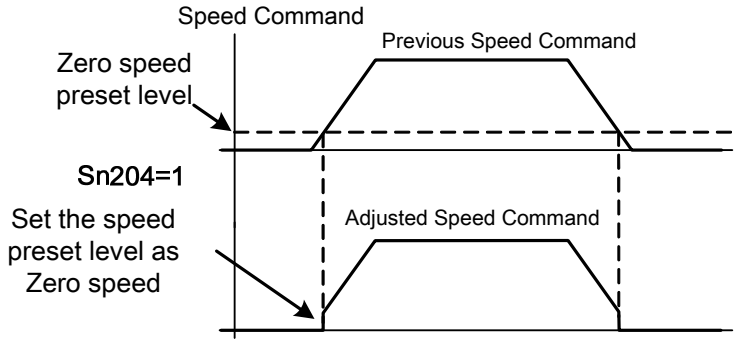

Servo Lock

In speed mode: the Servo Lock is used to lock servo motor when input voltage command is not at 0V.

When input contact **LOK** operates: The control mode changes to internal position control mode, it temporarily stop motor rotation. Please refer to section **5-6-**1 for setting input contact **LOK** function.

Speed Feed Back Smooth Filter

When there is system abnormal vibration or noise, Set **Cn032** (speed feed back smoothing filter) to restrain vibration or noise. Addition of this filter will delay the speed response of servo system.

Parameter Signal	Name	Default	Unit	Setting Range	Control Mode
Cn032	Speed feed back smoothing filter Restrain sharp vibration noise by the setting and this filter also delay the time of servo response.	500	Hz	1~1000	Pe/Pi/S

5-4 Position mode

Position control mode is used for high-precision applications on machinery such as machine tools.

The Position control mode offers ***two methods*** of control.

External pulse input position command

Internal position command.

In external pulse command input mode, the positioning command is signaled to the drive by a host Controller to achieve a fixed position.

In internal position command mode, 16 preset position commands can be set by parameters (**Pn317~Pn364**), and can be activated by use of input contacts **POS1 ~ POS4.**

Set parameter **Cn001** (control mode selection) as required according to the table below.

Parameter Signal	Name		Default	Unit	Setting Range	Control Mode
★Cn001	Control mode selection		2	X	0 | 6	ALL
	Setting	**Description**				
	2	**Position control (External pulse command)** Using one pulse command signal to control position. Please refer to 5-4-3.				
	6	**Position control (Internal pulse command)** Use input contacts to select 16 programmable preset position commands. Please refer to 5-4-2.				

New setting will become effective after re-cycling the power.

The diagram below shows the position loop control. Detailed functions are described in the following chapters.

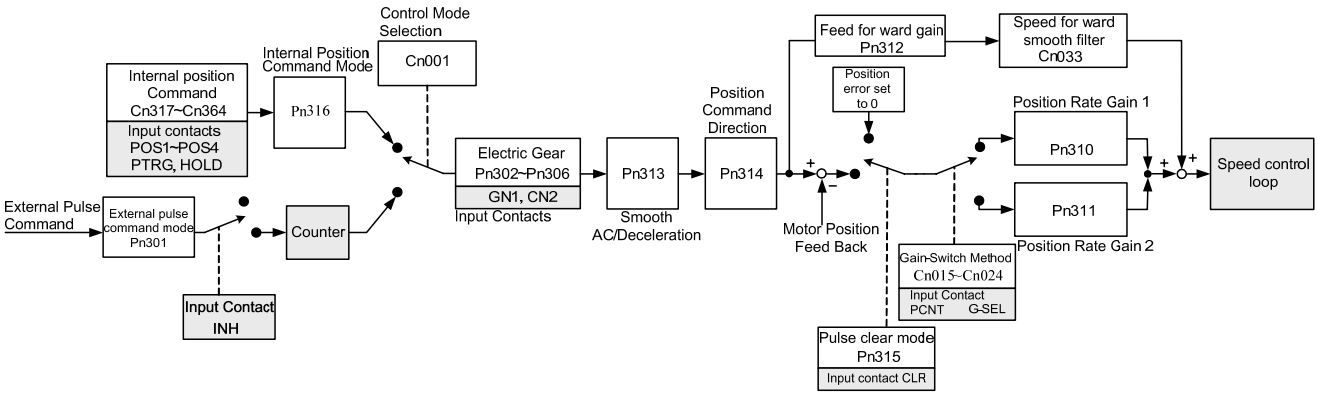

5-4-1 External Pulse Command

Four types of external position pulse command signals can be interfaced,
These can be selected from the list below.
Position pulse signal logic can be selected Positive or negative as required.

Parameter Signal	Name		Default	Unit	Setting Range	Control Mode
★Pn301.0 H0000	Position pulse command selection		0	X	0 | 3	Pe
	Setting	Description				
	0	(Pulse)+(Sign)				
	1	(CCW)and (CW) pulse				
	2	AB-Phase Pulsex2				
	3	AB-Phase Pulsex4				
★Pn301.1 H0000	Position pulse command logic selection		0	X	0 | 1	Pe
	Setting	Description				
	0	Positive Logic				
	1	Negative Logic				

New setting will become effective after re-cycling the power.

Position pulse command types	Positive Logic		Negative Logic	
	CCW Command	CW Command	CCW Command	CW Command
(Pulse)+ (Sign)	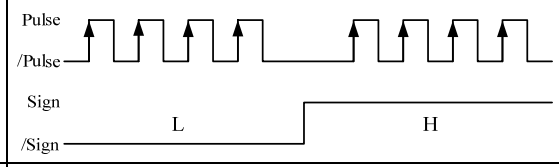		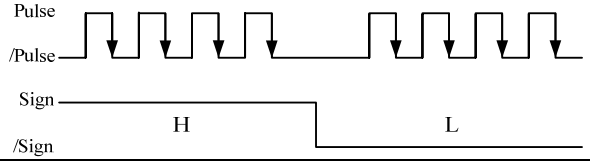	
(CCW)/ (CW) Pulse	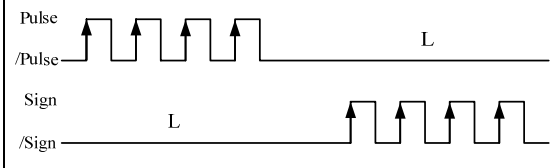		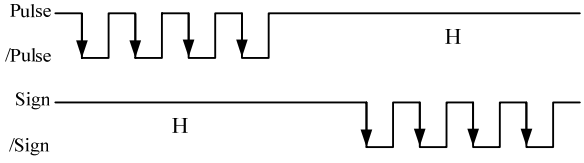	
AB-Phase Pulse	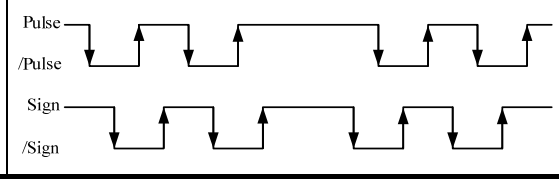		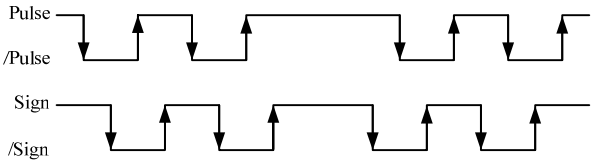	

Two types of pulse command can be connected, (Open collector) and (Line driver).

Please refer to **section 2-2-1** for the pulse wiring method.

Pulse command timing should be in accordance with the time sequence standard below.

Pulse Command Types	Time Sequence Diagram of Pulse Command	Time Standard
(Pulse)+ (Sign)	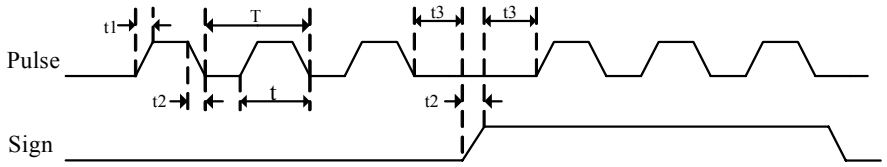	Line Driver: t1, t2 ≦ 0.1μs t3 > 3μs τ ≧ 1.0μs (τ/T) ≦ 50% OpenCollector: t1, t2 ≦ 0.2μs t3 > 3μs τ ≧ 2.0μs (τ/T) ≦ 50%
(CCW)/ (CW) Pulse	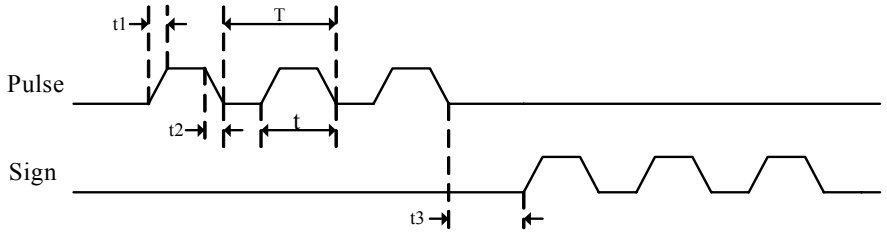	LineDrive: t1, t2 ≦ 0.1μs t3 > 3μs τ ≧ 1.0μs (τ/T) ≦ 50% OpenCollector: t1, t2 ≦ 0.2μs t3 > 3μs τ ≧ 2.0μs (τ/T) ≦ 50%
AB-Phase Pulse	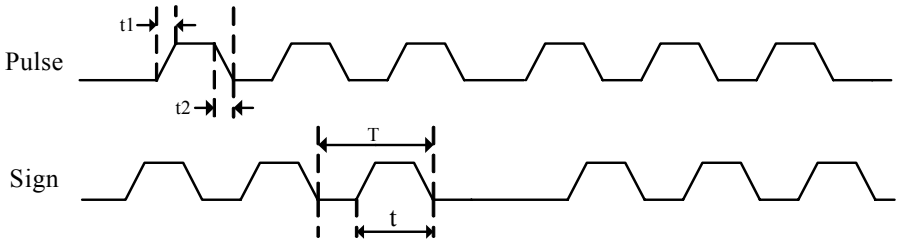	LineDrive: t1, t2 ≦ 0.1μs τ ≧ 1.0μs (τ/T) ≦ 50% OpenCollector: t1, t2 ≦ 0.2μs τ ≧ 2.0μs (τ/T) ≦ 50%

Position command can be disabled (Inhibited) by extrernal input contact **INH**.

Input Contact INH	Description	Control Mode
0	Position Pulse command **enabled**	Pe
1	Position Pulse command **disabled**	

Note: Input contacts status “1” (ON) and “0” (OFF)

Please check section 5-6-1 to set the required high /Low signal levels (PNP/NPN) selection.

5-4-2 Internal Position Command

In internal position command mode, 16 preset position commands can be set by parameters (**Pn317~Pn364**), and can be activated by use of input contacts **POS1 ~ POS4.**

Preset positions are programmable and can be selected according to the table below:

Position Command	POS4	POS3	POS2	POS1	Position Command Parameter		Position Speed Parameter
P1	0	0	0	0	Rotation Number	Pn317	Pn319
					Pulse Number	Pn318	
P2	0	0	0	1	Rotation Number	Pn320	Pn322
					Pulse Number	Pn321	
P3	0	0	1	0	Rotation Number	Pn323	Pn325
					Pulse Number	Pn324	
P4	0	0	1	1	Rotation Number	Pn326	Pn328
					Pulse Number	Pn327	
P5	0	1	0	0	Rotation Number	Pn329	Pn331
					Pulse Number	Pn330	
P6	0	1	0	1	Rotation Number	Pn332	Pn334
					Pulse Number	Pn333	
P7	0	1	1	0	Rotation Number	Pn335	Pn337
					Pulse Number	Pn336	
P8	0	1	1	1	Rotation Number	Pn338	Pn340
					Pulse Number	Pn339	
P9	1	0	0	0	Rotation Number	Pn341	Pn343
					Pulse Number	Pn342	
P10	1	0	0	1	Rotation Number	Pn344	Pn346
					Pulse Number	Pn345	
P11	1	0	1	0	Rotation Number	Pn347	Pn349
					Pulse Number	Pn348	
P12	1	0	1	1	Rotation Number	Pn350	Pn352
					Pulse Number	Pn351	
P13	1	1	0	0	Rotation Number	Pn353	Pn355
					Pulse Number	Pn354	
P14	1	1	0	1	Rotation Number	Pn356	Pn358
					Pulse Number	Pn357	
P15	1	1	1	0	Rotation Number	Pn359	Pn361
					Pulse Number	Pn360	
P16	1	1	1	1	Rotation Number	Pn362	Pn364
					Pulse Number	Pn363	

For internal positioning mode there are two types of moves incremental move or absolute move, selectable byparameter **Pn316** as below.

Parameter Signal	Name		Default	Unit	Setting Range	Control Mode
★Pn316.0	Internal position command mode selection		0	X	0 | 1	Pi
	Setting	Description				
	0	Absolute Position				
	1	Incremental Position				

New setting will become effective after re-cycling the power.

Example below shows the difference between absolute and incremental moves.

For two pulse commands of 10 pulse position pulse command and followed with another 20 pulse, the traveled positions will be different.

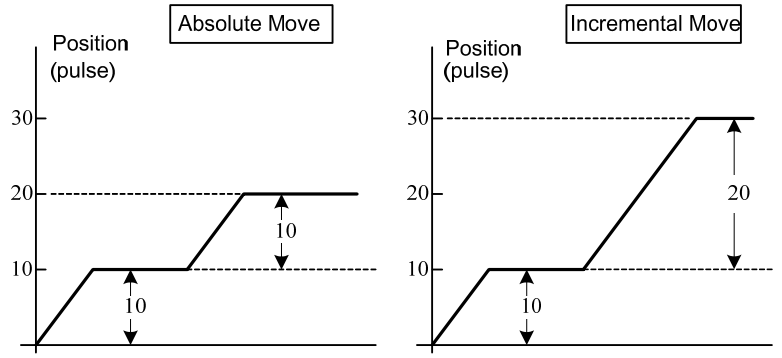

PTRG. (Position Trigger).

Once any preset position is selected by input contacts **POS1~POS4** then require a trigger signal **(PTRG)** from the input contact, enable **PTRG to** start operation.

Diagram below shows an example for 4 different absolute encoders.

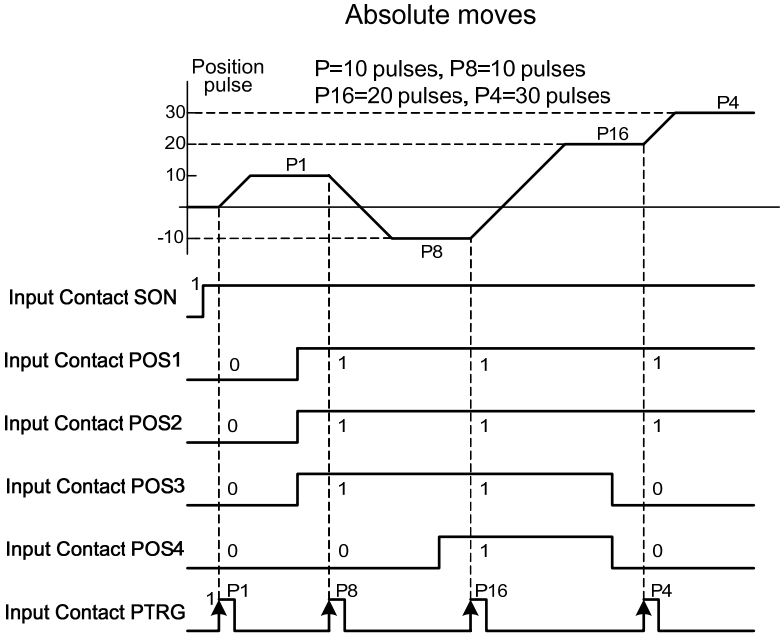

Note: Input contacts status “1” (ON) and “0” (OFF)

Please check section 5-6-1 to set the required high /Low signal levels (PNP/NPN) selection.

PHOLD. (Position Hold)

The Position command can be inhibited (Held) at any time by input contact signal **PHOLD**.

Once PHOLD is initiated the motor will decelerate and stop.

As soon as the input contact **PTRG** is triggered again the original position command will be Completed.

Diagram below shows PHOLD function with incremental encoder.

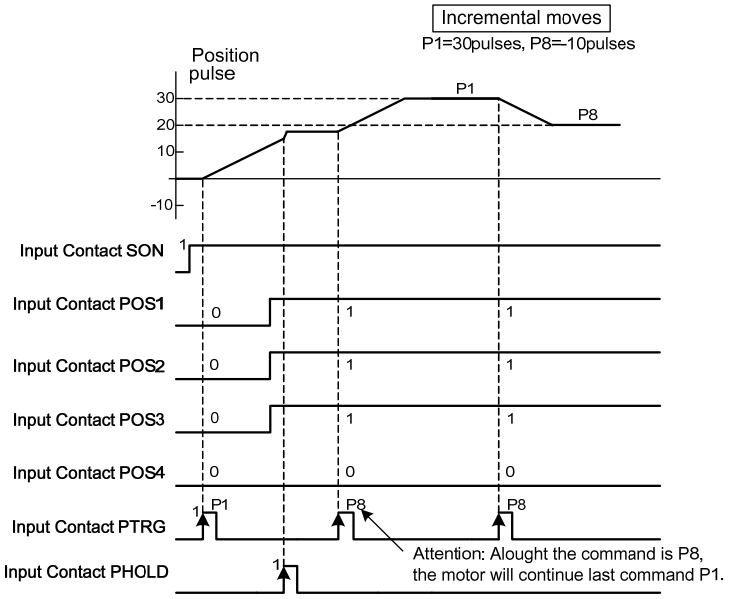

CLR (Clear position command).

If the CLR input is activated when a position command is in process then the motor will stop immediately and the remaining positioning pulses will be cleared. Parameter Pn315 must be set to 1or 2 as required (refer to section 5-4-7).

Once the PTRG input contact is activated again then a new position command will be started according to the selection of input contacts POS1~POS4.

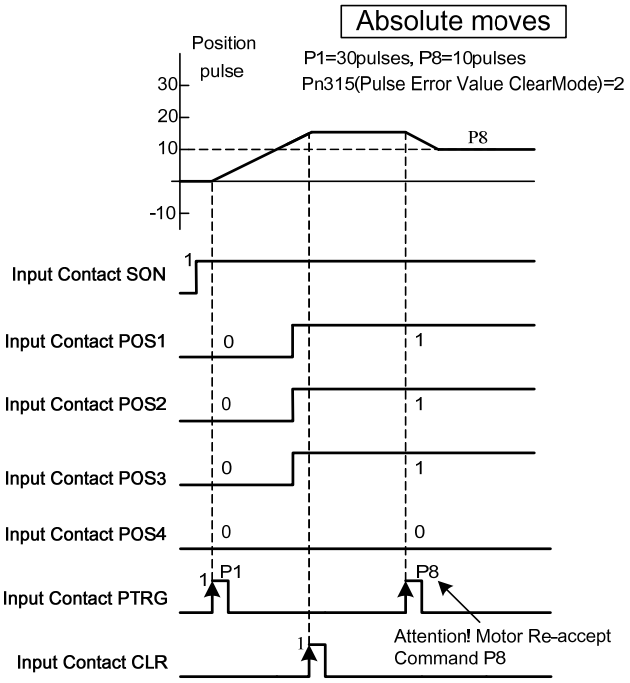

Note: Input contacts status “1” (ON) and “0” (OFF)

Please check section 5-6-1 to set the required high /Low signal levels (PNP/NPN) selection.

5-4-3 Electronic Gear

Electronic gear ratio parameter can be used to scale the command output pulse.

This would be useful in transmission applications where move distance per move command pulse has to be scaled due to mechanical requirements.

Diagram and notes below describe the electronic gear ratio effect.

Example of a transmission device and calculations that show the required number of pulses from a host controller to move the table by 10mm.

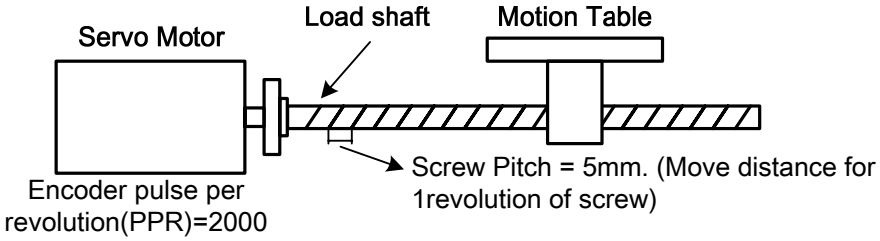

Calculations without Electronic Gear Ratio	Calculations with Electronic Gear Ratio
1. One rotation of ball screw = Table move distance of 5mm. **2**. If the table is required to move 10mm, then Ball screw needs to rotate by (10mm ÷ 5 mm/rev)= 2 Revs **3**. Command pulses required to cause one revolution:- = Encoder ppr × (Internal multiplication factor). = 2000 ppr x 4 = 8000 pulses. **4**. So the Command pulses required to move 10mm (2 revs):- = 8000 pulses x 2 (revs) = 16000 Pulses. **Number of command pulses for an specific move distance can be calculated according to the formula below:** **= Number of Ball Screw Revs x (Encoder ppr x 4).**	For Calculating the number of pulses command required, Setting of Electronic gear ratio see next chapter. Electronic gear ratio can be set according to the required **move distance per move command pulse**. For example: 1. One Pulse command = Move distance of 1μm. 2. If the Motion Table needs to move 10mm, Then the required command pulses from a Host Controller is = 10mm ÷ 1μm / Pulse.= 10000 Pulses. **Once the move distance per pulse and the Electronic gear ratio is known then the required number of pulse command can be calculated.**

Electronic Gear Ratio Calculation

Follow the Steps below:

1. Define the requirements of the positioning system

Establish the following:

Move distance per one revolution of load shaft.

Servo motor Encoder ppr (Pulse Per Revolution). (please refer to section 1-1-2 Servo Motor Standards).

Motor / load Shaft deceleration ratio.

2. Move distance per one move command pulse.

Define the move distance caused by the transmission system as a result of, one move command pulse from the host controller.

Ex: When 1 Pulse Command move = 1μm

If the Host Controller gives a move command of 2000 pulses, the transmission device will move by: -

$2000\text{pulse} \times 1\text{um/pulse} = 2\text{mm}$ (The Electronic Gear Ratio must be set correctly).

3. Calculate the Electronic Gear Ratio

Calculate the Electronic Gear Ratio according to the formula below:-

$$\text{Electronic Gear Ratio} = \frac{\text{Encoder ppr (Pulse Per Revolution) x 4}}{\text{Move distance per load shaft revolution} \div \text{Move distance per command Pulse}}$$

If the deceleration ratio between motor and load shaft is $\frac{n}{m}$

(m = Motor Rotating number , n= Load Shaft Rotating Value), Then the formula for Electronic Gear Ratio is:

$$\text{Electronic Gear Ratio} = \frac{\text{Encoder ppr (Pulse Per Revolution) x 4}}{\text{Move distance per load shaft revolution} \div \text{Move distance per command Pulse}} \times \frac{m}{n}$$

Warning!

The calculated Electronic Gear Ratio must be according to the conditions below, otherwise the servo drive and motor will not function correctly.

$$\frac{1}{200} \leq ElectronicGearRatio \leq 200$$

4. Parameter Setting for Electronic Gear Ratio

Setting gear ratio Numerator and denominator parameters:

Numerator and denominator values of the calculated electronic gear ratio must be entered in the required parameters.

These two values have to be integer and with a value within the specified range in the table below.

Parameter Signal	Name	Default	Unit	Setting Range	Control Mode
Pn302	Numerator of Electronic Gear Ratio 1	1	X	1~50000	Pi/Pe
Pn303	Numerator of Electronic Gear Ratio 2				
Pn304	Numerator of Electronic Gear Ratio 3				
Pn305	Numerator of Electronic Gear Ratio 4				
★Pn306	Denominator of Electronic Gear Ratio				

New setting will become effective after re-cycling the power.

This device provides 4 selections of Numerator for Electronic Gear Ratio.

Input contacts **GN1** and **GN2** can be used to select the required Numerator for the Electronic Gear Ratio According to the table below.

Input Contact GN2	Input Contact GN1	Numerator of Electronic Gear Ratio	Control Mode
0	0	Numerator of Electronic Gear Ratio 1 **Pn302**	Pi/Pe
0	1	Numerator of Electronic Gear Ratio 2 **Pn303**	
1	0	Numerator of Electronic Gear Ratio 3 **Pn304**	
1	1	Numerator of Electronic Gear Ratio 4 **Pn305**	

Note: Input contacts status “1” (ON) and “0” (OFF)

Please check 5-6-1 to set the required high /Low signal levels (PNP/NPN) selection.

Electronic Gear Ratio setting examples

Transmission System	Setting Process
Ball Screw 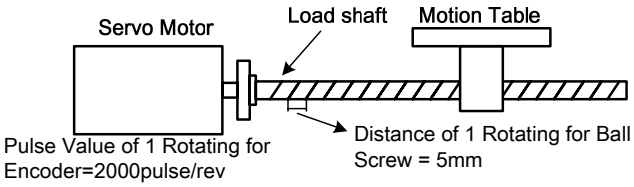 	**1. Main positioning specifications:** a) Load Shaft(Ball Screw) pitch move distance per revolution= 5mm b) Motor Encoder ppr (Pulse per revolution) = 2000pulses **2. Move distance per one pulse of move Command.** Moving Distance of 1 Pulse Command =1μm **3. Calculation of the Electronic Gear Ratio:** $\text{ElectronicGear Ration} = \frac{2000 pulse/rev \times 4}{5mm/rev \div 1um/pulse} = \frac{8000}{5000}$ **4. Set the parameter of Electronic Gear Ratio:** **Numerator** of Electronic Gear Ratio = 8000 **Denominator** of Electronic Gear Ratio = 5000
Mechanical Disc 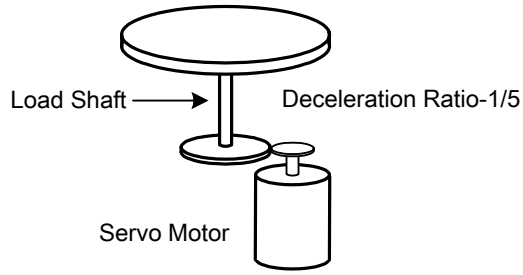 Pulse Value of Rotating for Encoder = 2500pulse/rev	**1. Main positioning specifications:** a) Deceleration Ratio=1/5 b) Load Shaft(Mechanical Disc)Move Value per one revolution=360 ˚ Motor Encoder ppr (Pulse per revolution)= 2500 pulses **2. Move distance per one pulse of move Command.** Distance for 1Pulse Command =0.1 ˚ **3. Calculation of the Electronic Gear Ratio:** $\text{Electronic Gear Ratio} = \frac{2500 pulse/rev \times 4}{360° \div 0.1°/pulse} \times \frac{5}{1} = \frac{50000}{3600}$ **4. Set the parameter of Electronic Gear Ratio:** Numerator of Electronic Gear Ratio = 50000 Denominator of Electronic Gear Ratio =3600
Transmission Belt 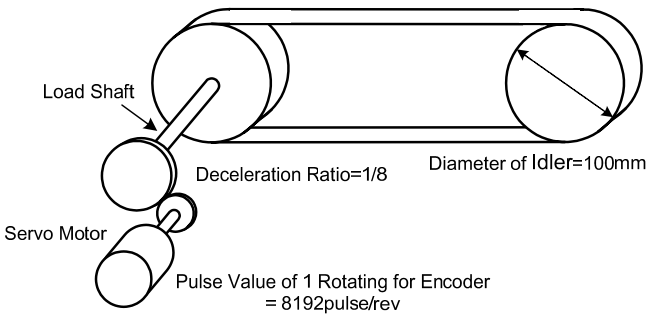 Pulse Value of 1 Rotating for Encoder = 8192pulse/rev	**1. Main positioning specifications:** a) Deceleration Ratio=1/8 b) Load Shaft (Idler) Move Value per revolution. $= 3.14 \times 100\text{mm} = 314\text{mm}$ c) Motor encoder ppr (Pulse Per Revolution) = 8192pulse **2. Move distance per pulse of move Command.** Distance for 1Pulse Command =10μm **3. Calculation the Electronic Gear Ratio:** $\text{Electronic Gear Ratio} = \frac{8192 pulse/rev \times 4}{314mm \div 10um/pulse} \times \frac{8}{1} = \frac{262144}{31400}$ **4. Set the parameter of Electronic Gear Ratio:** Reduction of the fraction to make the Numerator and Denominator less than 50000. Numerator of Electronic Gear Ratio 32768 Denominator of Electronic Gear Ratio 3925

5-4-4 Smooth Acceleration

Using the **One Time Smooth Acceleration/Deceleration of Position Command**"

It smoothes the position pulse command frequency.

Parameter Signal	Name	Default	Unit	Setting Range	Control Mode
★Pn313	Position command Accel/Decel Time Constant	0	msec	0~10000	Pi/Pe

New setting will become effective after re-cycling the power.

Time Constant of One Time Smooth Acceleration/Deceleration of Position Command:

The Time in which The Position Pulse Frequency increases (one time) from zero to 63.2% of Position Pulse Command Frequency.

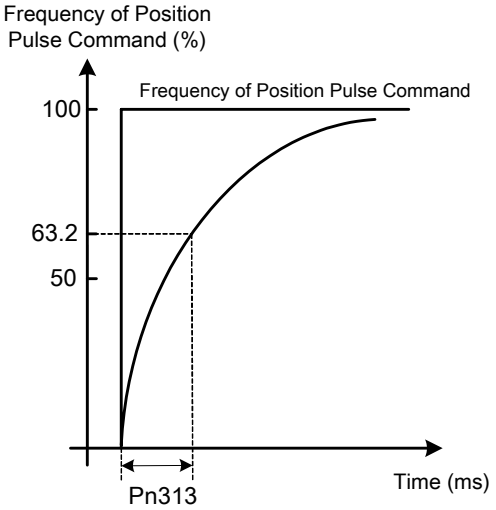

Setting Examples:

(1) To achieve 95% of Position Pulse Command Frequency Output in 30msec:

$$Pn313 = \frac{30(msec)}{-\ln(1-95\%)} = 10(msec)$$

(2) To achieve 75% of Position Pulse Command Frequency Output in 30msec:

$$Pn313 = \frac{30(msec)}{-\ln(1-75\%)} = 22(msec)$$

Note: Above curve is a logarithmic

ln = Natural log.

5-4-5 Definition of Direction

In position mode, user can use Pn314 (Position Command Direction Definition) to define motor rotation direction. The setting is showed as follow:

Parameter Signal	Name	Default	Unit	Setting Range	Control Mode
★Pn314	Definition of position command direction (from motor load end) 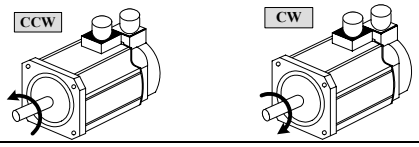	1	X	0 | 1	Pi Pe

Setting	Description
0	Clockwise (CW)
1	Counter Clockwise (CCW)

New setting will become effective after re-cycling the power.

5-4-6 Gain Adjustment

The table below shows the parameters for adjusting the position loop.

Two position loop gains can be selected from input contact terminals according to table below.

For selection methods refer to section. **5-3-11.**

Parameter Signal	Name	Default	Unit	Setting Range	Control Mode
Pn310	Position Loop Gain1 Without causing vibration or noise on the mechanical system the position loop gain value can be increased to increase system response and shorten the positioning time.Generally, the position loop bandwidth should not be higher then speed loop bandwidth. The relationship is according to the formula below: $PositionLoopGain \le 2\pi \times \frac{SpeedLoopGain}{5}$	40	1/s	1~450	Pe/Pi
Pn311	Position Loop Gain 2 Refer to **Pn310**	40	1/s	1~450	Pe/Pi
Pn312	Position Feed-Forward Gain t can be used to reduce the track error of position control and speed up the response.If the feed forward gain is too large, it might cause speed overshoot and **INP** contact repeatedly switch ON/OFF.**INP**(“In Position” output signal).	0	%	0~100	Pe/Pi
Cn033	Speed Feed-Forward Smooth Filter Smooth the speed feed-forward command.	40	Hz	0~100	Pe/Pi

Diagram below shows the position controller. Adjust a higher gain value can reduse response time.
Position Feed-Forward Gain can also be used to shorten the positioning time.
refer to section 5-5 for Position Loop Gain Adjustment methods.

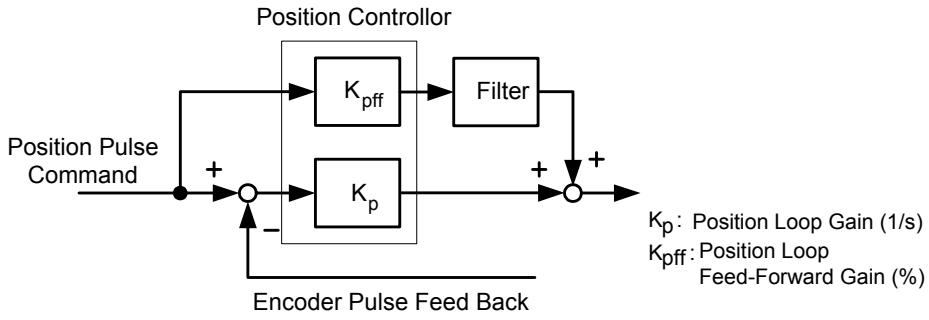

5-4-7 Clear the Pulse Offset

In position control mode, **parameter Pn315** (Pulse Error clear mode) has three modes can be select.
CLR input contact is used to clear the pulse error as required according to the list below.

Parameter	Name		Default	Unit	Setting Range	Control Mode
Pn315	Pulse Error Clear Mode		0	X	0 | 2	Pe
	Setting	Description				
	0	When Input **CLR** contact, clears the pulse error value.				
	1	When Input **CLR** contact to cancels the position command, Stops the motor rotating, the pulse error value is cleared and mechanical Home signal is reset.				Pi Pe
	2	When Input **CLR** contact to cancels the position command, stops the motor rotating and the pulse error value is cleared.				Pi

Note: Input contacts status “1” (ON) and “0” (OFF)
Please check 5-6-1 to set the required high /Low signal levels (PNP/NPN) selection.

5-4-8 Original Home

Home routine is used to find and set a reference point for correct positioning.

To set a HOME reference position, one of input contacts ORG (external sensor input), CCWL, or CWL can be used.

An encoder Z phase (marker pulse) can also be used as home reference and can be search by CW or CCW direction. Following Home routine selections are available for setting parameter Pn 365.0.

Parameter	Name	Setting	Description	Control Mode
Pn365.0	On activation of Home input contact, It sets the search direction and Home reference. (Setting for home routine)	0	Once the home routine is activated, motor will search for Home Position switch in 1st preset speed in **CCW** direction**.** Input contacts CCWL or CWL can be used as the Home Reference Switch. Once Home reference switch is detected and complete, input contacts **CCWL** and **CWL** will act as limits input contact again. **Note:** When using this function, 1 or 2 setting of **Pn365.1** is not allowable. **Cn002.1 (**CCWL & CWL Input terminal function**) must to set as 0.**	Pi/Pe
		1	Once the home routine is activated, motor will search for Home Position switch in 1st preset speed in **CW direction.** Input contacts CCWL or CWL can be used as the Home Reference Switch. Once Home reference switch is detected and complete, input contacts **CCWL** and **CWL** will act as limits input contact again. **Note:** When using this function, 1 or 2 setting of **Pn365.1** is not allowable. **Cn002.1 (**CCWL & CWL Input terminal function**) must to set as 0.**	
		2	Once the home routine is activated , motor will search for Home Position switch in 1st preset speed in **CCW direction** and sets the input contact ORG (external sensor input) as a Home reference when ORG contact is activated. If **Pn365.1=2**, it will directly find the closest Rising-Edge of **ORG** to be the Home position (without a need for Home reference),then it stops in accordance with **Pn365.3** setting.	
		3	Once the home routine is activated , motor will search for Home Position switch in 1st preset speed in **CW direction** and sets the input contact ORG (external sensor input) as a Home reference when ORG contact is activated. If **Pn365.1=2**, it will directly find the closest Rising-Edge of **ORG** to be the Home position (without a need for Home reference),then it stops in accordance with **Pn365.3** setting.	
		4	Once the home routine is activated , motor will search for Home position in 1st preset speed in **CCW** direction and sets the Home reference Servo drive start to find the Home position of the nearest Z phase. (No need for Home reference) When using this function, set **Pn365.1=2** . After finished setting of **Z** Phase to the Home position, for the stop method refer to the setting of **Pn365.3.**	
		5	Once the home routine is activated , motor will search for Home position in 1st preset speed in **CW** direction and sets the Home reference Servo drive start to find the Home position of the nearest Z phase. (No need for Home reference) When using this function, set **Pn365.1=2** . After finished setting of **Z** Phase to the Home position, for the stop method refer to the setting of **Pn365.3.**	

Parameter	Name	Setting	Description	Control Mode
Pn365.1 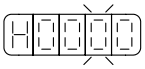	Once Reference Home switch or Signal, is found set search method for the Home position.	0	Once the Home Reference switch or signal is detected, motor **reverses direction** in 2nd speed to find the nearest **Z** Phase pulse and sets this as the Home position, then stops in accordance with **Pn365.3** setting method.	Pi/Pe
		1	Once the Home Reference switch or signal is detected, motor **Continues in its direction** in 2nd speed to find the nearest **Z** Phase pulse and sets this as the Home position, then stops in accordance with **Pn365.3** setting method.	
		2	When **Pn365.0=2** or **3**, it finds the rising edge of ORG to be the Home position, then stops in accordance with **Pn365.3**; When **Pn365.0=4** or **5**, it finds **Z** Phase pulse to be the Home, then stops in accordance with **Pn365.3**.	
Pn365.2 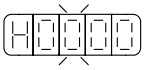	Setting of Home Routine Start method	0	Homing routine is **Disabled.**	Pi/Pe
		1	On power up and activation of **Servo on** the home routine is started automatically. This method is useful for applications that do not require repeated home routines. No external home reference switch is required.	
		2	Use **SHOME** input contact to start a home routine. In position mode, **SHOME** can be used to start a home routine at any moment.	
Pn365.3 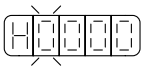	Stopping mode after finding Home signal.	0	After detecting the Home signal, it **sets** this position to be the Home reference (**Un-14** encoder feed back rotating number and **Un-15** encoder feed back pulse number are all 0), motor decelerates and stops. Then it reverses direction in 2nd speed to detect the Home Position again then it decelerates and stops..	Pi/Pe
		1	After detecting the Home signal, it **sets** this position to be the Home reference (**Un-14** encoder feed back rotating number and **Un-15** encoder feed back pulse number are all 0), motor decelerates and stops.	

Home Mode selection table

Pn365.0 pn 365.1 selections can be made for each application as required according to the table below:-

Pn365.1 \ Pn365.0	0	1	2	3	4	5
0	●	●	●	●	×	×
1	×	×	●	●	×	×
2	×	×	●	●	●	●

● HOME routine available × HOME routine not available.

Additional Home routine parameters

Home search speed parameters 1st (Fast) and 2nd (Slow) speeds are set according to table below:

Parameter Signal	Name	Default	Unit	Setting Range	Control Mode
Pn366	1st preset high speed of HOME	100	rpm	0~2000	Pi/Pe
Pn367	2nd preset low speed of HOME	50	rpm	0~500	Pi/Pe

Parameters Pn368 and Pn 369 provide Home position offset feature for applications where the machine mechanical home position is a different position to the detected home position. This offset can be achieved by setting the two parameters below.
Once the detected home position is found in accordance with **Pn365** (Home routine mode), then it will search by number of revolutions and pulses set in Pn368 and Pn 369 to find the new off set Home position.

Parameter Signal	Name	Default	Unit	Setting Range	Control Mode
Pn368	HOME Position Offset. (No of Revolutions)	0	rev	-30000~30000	Pi/Pe
Pn369	HOME position Bias Pulse value (No of pulses)	0	pulse	-32767~32767	Pi/Pe

Home routine Timing Chart

During the Home routine if the SON (Servo On) is not activated or any alarm happens, Home routine is stopped and Home Complete output contact is reset (Cleared).

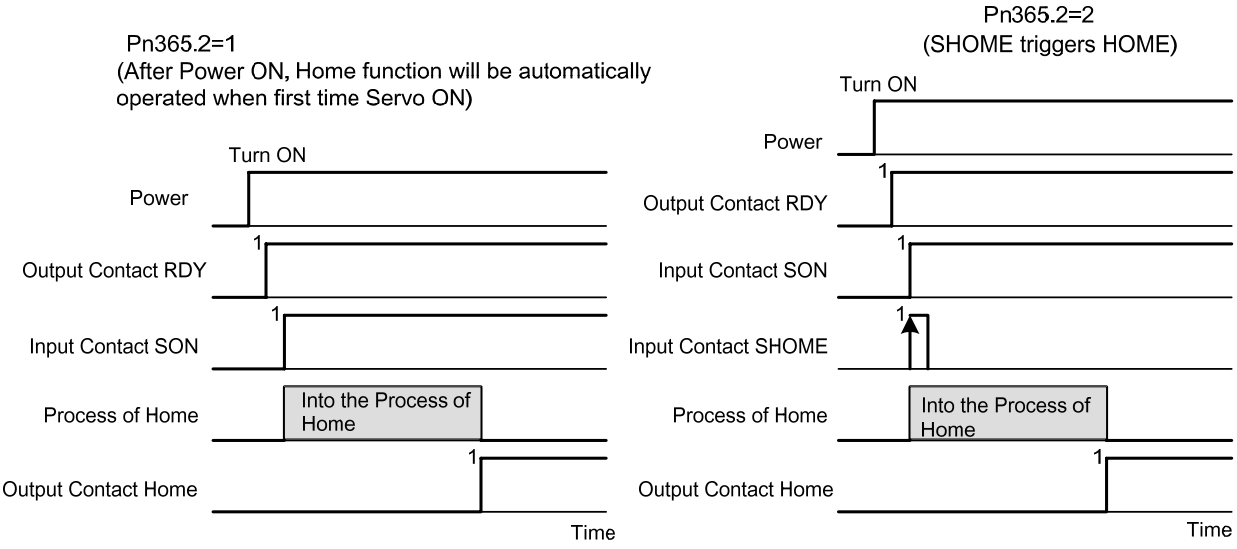

Note: Input contacts status “1” (ON) and “0” (OFF)

Please check 5-6-1 to set the required high /Low signal levels (PNP/NPN) selection.

Home Routine Speed /Position Timing Charts

Following Sections Show the Speed/Position Timing charts according to Pn 365.0 and Pn365.1 selections.

Pn365.0 / Pn365.1	0	1	2	3	4	5
0	(1)	(2)	(1)	(2)	✖	✖
1	✖	✖	(3)	(4)	✖	✖
2	✖	✖	(5)	(6)	(7)	(8)

✖ No Home routine

(1)

Pn365.0=0 or **2** (After starting HOME routine, run **CCW** in 1st preset high speed for HOME Reference (**CCWL**, **CWL** or **ORG**).

Pn365.1=0(After finding HOME Reference, **reverse direction** in 2nd preset low speed to search for the nearest **Z** Phase pulse to be set as the HOME position).

Pn365.2=2(Input Contact SHOME to Start Home routine).
Pn365.3=0(**Reverse search for** HOME position).

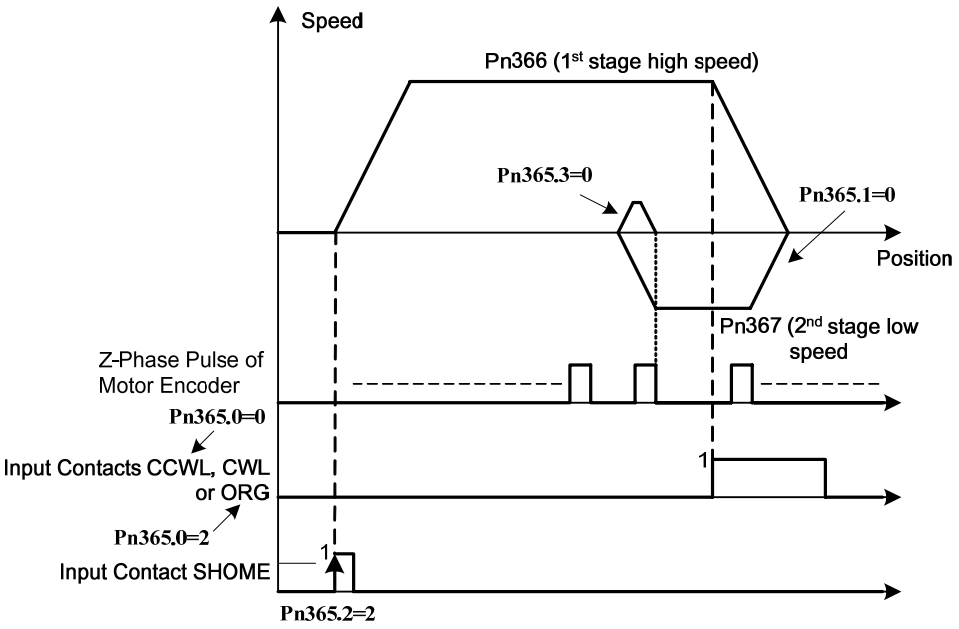

(2)

Pn365.0=1or **3** After starting the HOME routine, run **CW** in 1st preset high speed to search for HOME Reference (**CWL**, **CCWL** or **ORG**).

Pn365.1=0 After finding HOME Reference, **reverse direction** in 2nd preset low speed to search for the nearest **Z** Phase pulse to be set as the HOME position.

Pn365.2=2 Input Contact SHOME Starts the Home routine.

Pn365.3=0 Reverse search for HOME position.

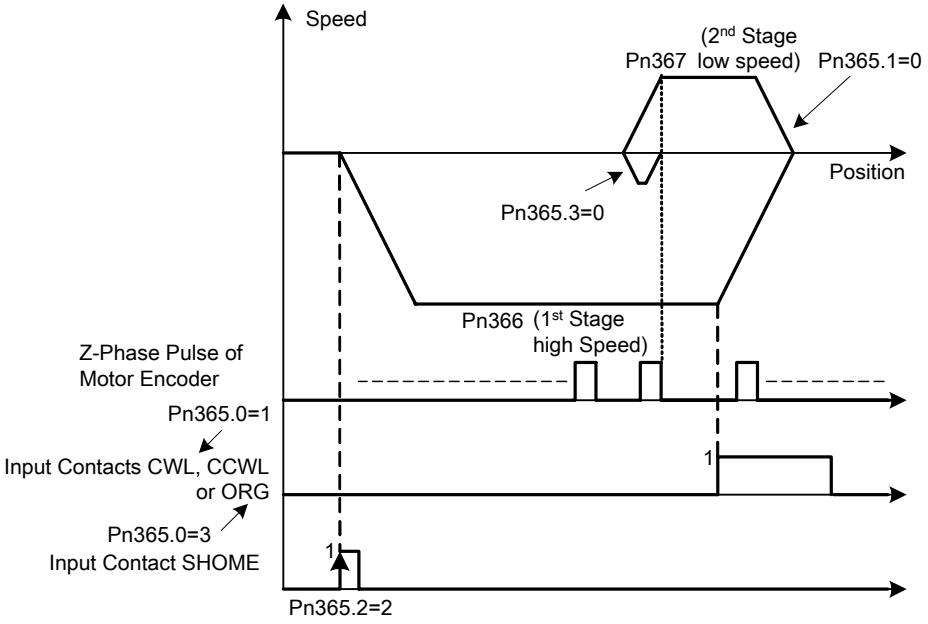

(3)

Pn365.0=2 After starting HOME routine, **run CCW** in 1st preset high speed to search for HOME Reference (**ORG**).

Pn365.1=1 After finding HOME Reference, **continues in the same direction** in 2nd preset low speed to find the nearest **Z** Phase to be set as the HOME position.

Pn365.2=2 Input Contact **SHOME** Starts the HOME routine.

Pn365.3=0 Reverse search for HOME position

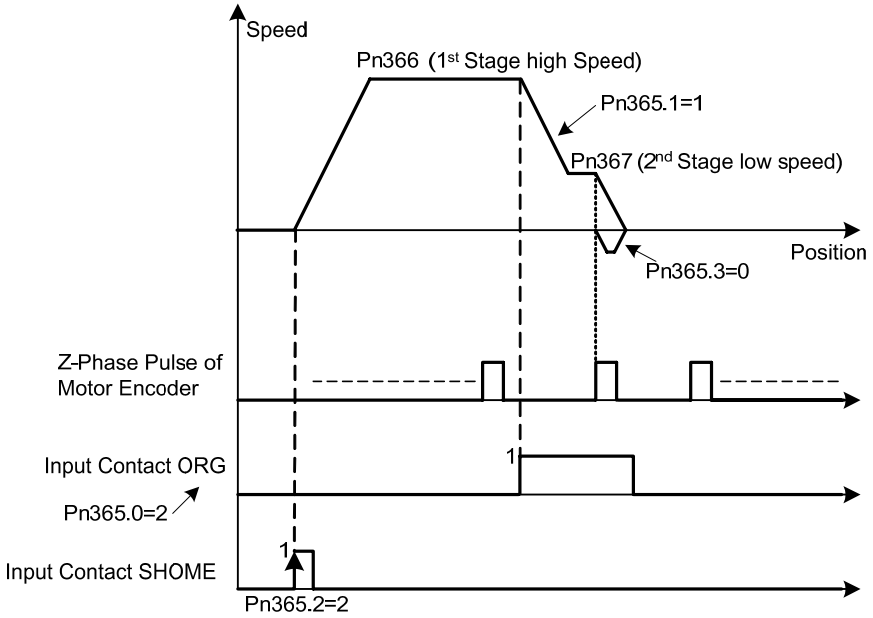

(4)

Pn365.0=3 (After Starting HOME routine, run **CW** in 1st preset high speed to search for HOME Reference.(**ORG**)

Pn365.1=1 After finding HOME Reference, **continues in the same direction** in 2nd preset low speed to find the nearest **Z** Phase to be set as the HOME position.

Pn365.2=2 Input Contact **SHOME** Starts the HOME routine.

Pn365.3=0 Reverse search for HOME position

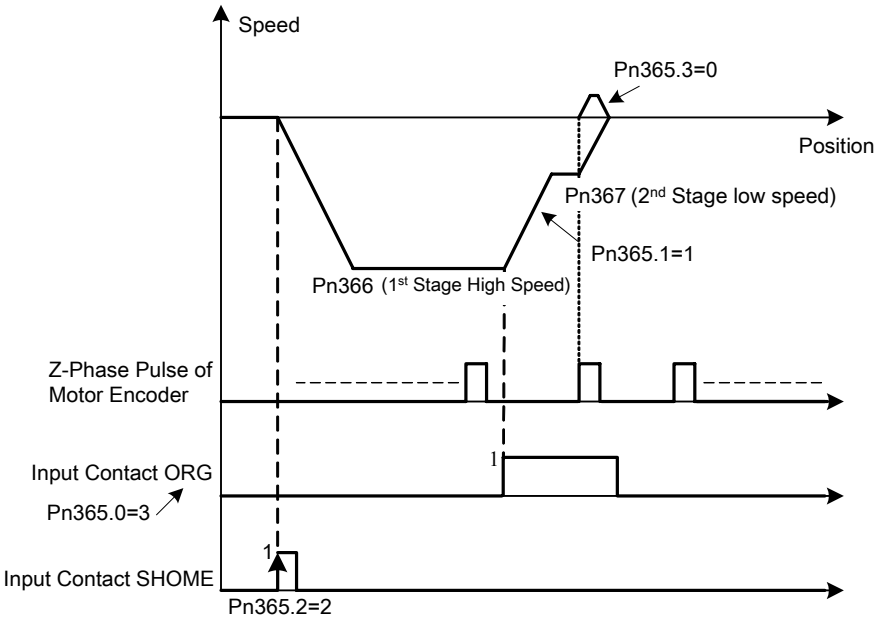

(5)

Pn365.0=2 After Starting HOME routine, run C**CW** in 1st preset high speed to search for HOME Reference.(**ORG**).

Pn365.1=2 After Finding the HOME Reference, the Rising Edge of **ORG sets the** HOME Position.

Pn365.2=2 Input Contact **SHOME** Starts the HOME routine.

Pn365.3=0 Reverse search for HOME position

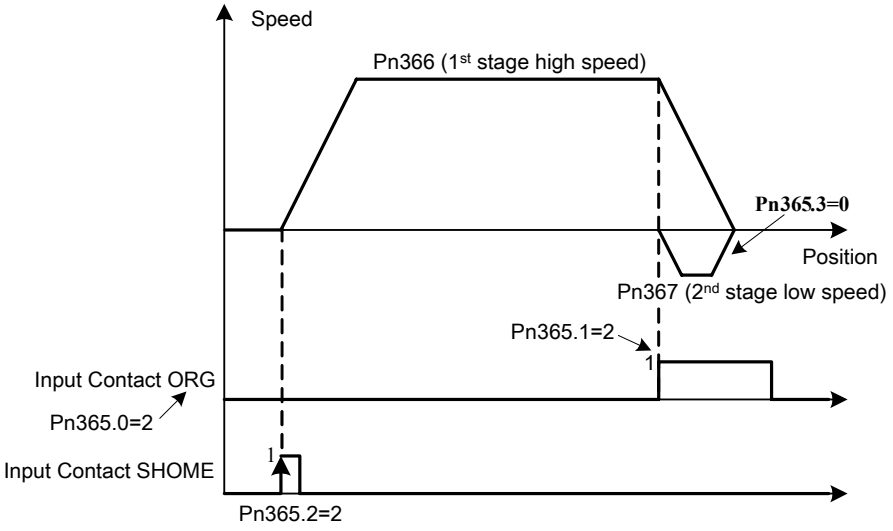

(6)

Pn365.0=3 After Starting HOME routine, run **CW** in 1st preset high speed to search for HOME Reference.(**ORG**).

Pn365.1=2 After Finding the HOME Reference, the Rising Edge of **ORG sets the** HOME Position.

Pn365.2=2 Input Contact **SHOME** Starts the HOME routine.

Pn365.3=0 Reverse search for HOME position

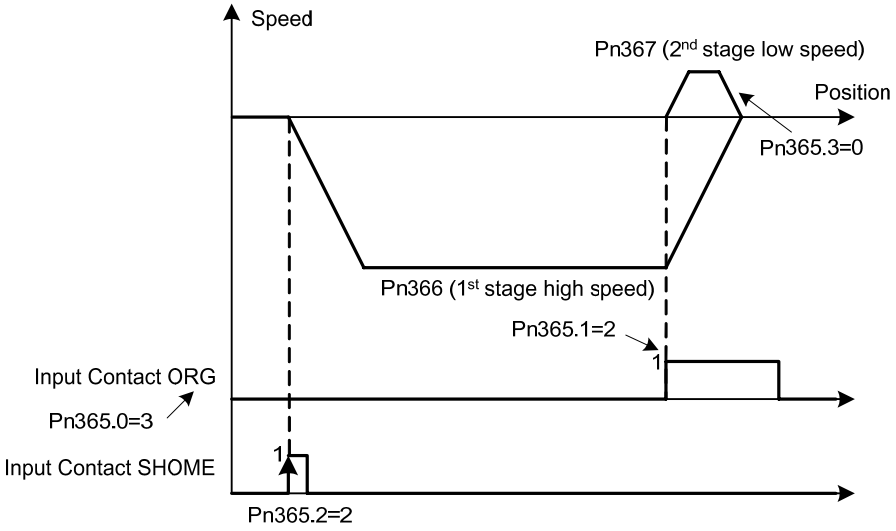

(7)

Pn365.0=4 After Starting HOME routine, run **CCW** in 1st preset high speed to search for the nearest Z phase pulse.

Pn365.1=2 After Finding the Z phase pulse, set this position as the HOME position.

Pn365.2=2 Input Contact **SHOME** Starts the HOME routine.

Pn365.3=0 Reverse search for HOME position

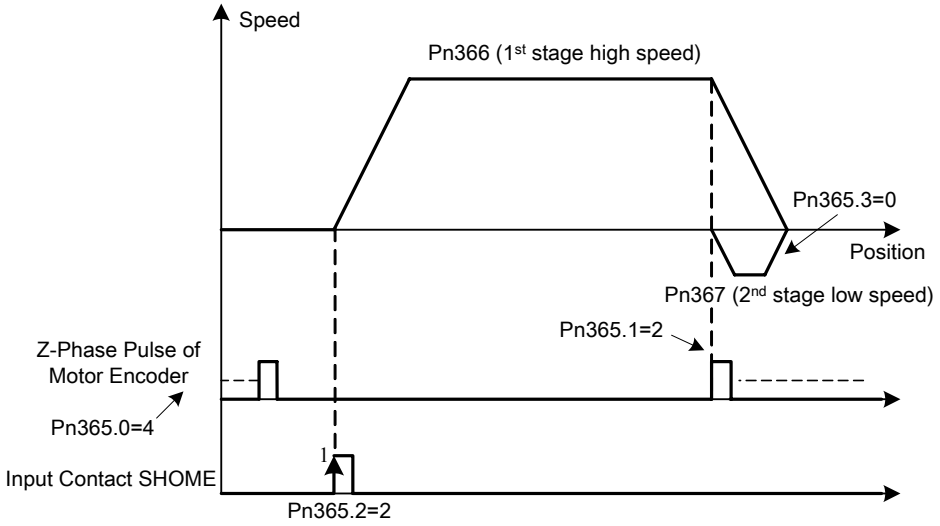

(8)

Pn365.0=5 After Starting HOME routine, run **CW** in 1st preset high speed to search for the nearest Z phase pulse.

Pn365.1=2 After Finding the Z phase pulse, set this position as the HOME position.

Pn365.2=2 Input Contact **SHOME** Starts the HOME routine.

Pn365.3=0 Reverse search for HOME position

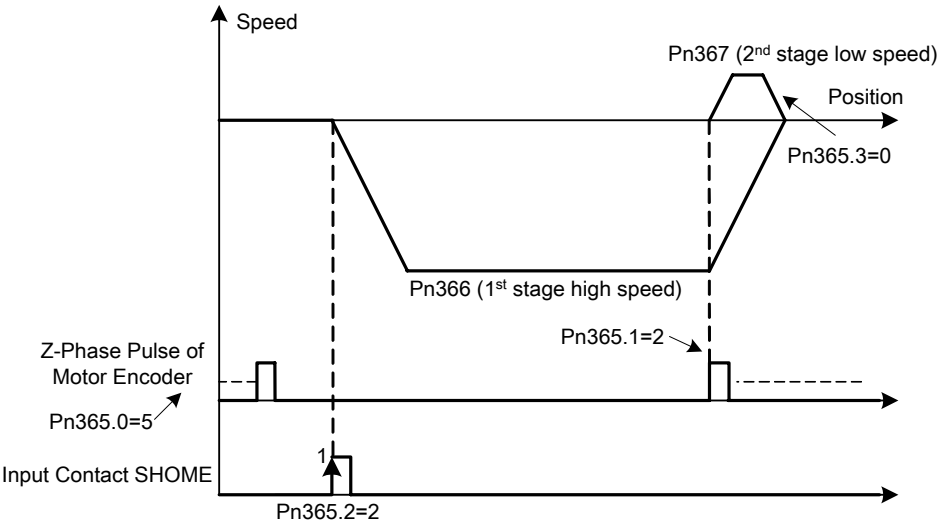

5-4-9 Other Position Function

In position (Position Complete)

As long as the position **error value** (counts) is less than the pulse counts set in **Pn307** (Position Complete value) then **INP output contact** will be activated.

Parameter	Name	Default	Unit	Setting Range	Control Mode
Pn307	Position Complete value Set a value for In position output signal. When the Position pulse error value is less then **Pn307** output-contact **INP (In position output signal)** will be activated.	10	pulse	0~50000	Pi/Pe

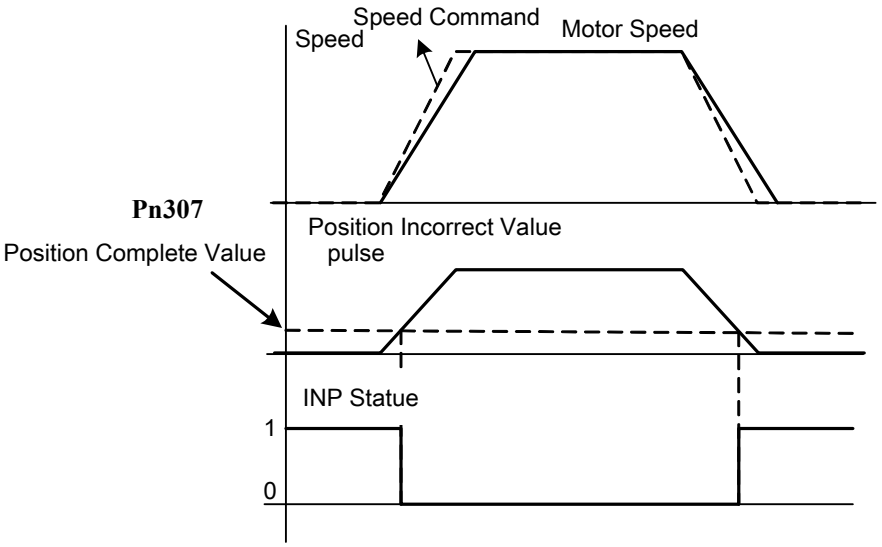

Note: Input contacts status “1” (ON) and “0” (OFF)

Please check 5-6-1 to set the required high /Low signal levels (PNP/NPN) selection.

Position error alarm

When the Position error value is greater than the preset pulse value of **Pn308** (Positive position error level) or **Pn309** (Negative position error level) this will generate **AL-11** (**Position error**) signal.

Parameter	Name	Default	Unit	Setting Range	Control Mode
Pn308	Positive position error level When the Position error value is higher then number of pulses set in **Pn308**, an Alarm message **AL-11**(Position error value alarm) will be displayed.	50000	pulse	0~50000	Pi/Pe
Pn309	Negative position error level When the Position error value is lower then number of pulses set in **Pn309**, an Alarm message **AL-11**(Position error value alarm) will be displayed.	50000	pulse	0~50000	Pi/Pe

5-5 Gain Adjustment

The Servo controller provides 3 control loops as diagram shown below:

Control methods are: **Current** Control, **Speed** Control and **Position** Control.

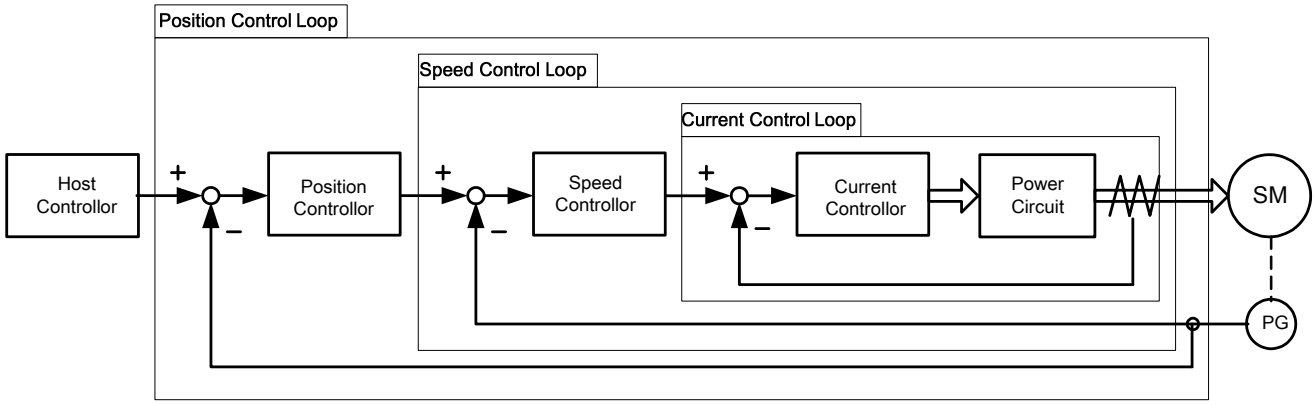

Diagram above shows the three control loops.

Current (Inner loop), Speed (middle loop) and position (outer loop).

Theoretically, the bandwidth of inner control loop must be higher than the bandwidth of the outer control loop, otherwise, the whole control system will become unstable, and cause vibration or abnormal response.

The relationship between the **band width** for these three control loops is as follows:

Current Loop (Inner) >Speed Loop (Middle)>Position Loop (outer).

The **default current control bandwidth** has already been set for optimum response, So **Only speed and position control loop gains** may be adjusted.

Table below shows the Gain adjustment parameters for the three control loops.

Parameter	Name	Default	Unit	Setting Range	Control Mode
Sn211	Speed Loop Gain 1	40	Hz	10~450	Pe/Pi/S
Sn212	Speed Loop Integration Time Constant 1	100	x0.2 msec	1~500	Pe/Pi/S
Sn213	Speed Loop Gain 2	40	Hz	10~450	Pe/Pi/S
Sn214	Speed Loop Integration Time Constant 2	100	x0.2 msec	1~500	Pe/Pi/S
Pn310	Position Loop Gain 1	40	1/s	1~450	Pe/Pi
Pn311	Position Loop Gain 2	40	1/s	1~450	Pe/Pi
Pn312	Position Loop Feed-Forward Gain	0	%	0~100	Pe/Pi
Cn025	Load Inertia Ratio	40	x0.1	0~1000	Pe/Pi/S

Speed Loop Gain

Speed Loop Gain has a direct effect on the response Bandwidth of Speed Control Loop.

Under the condition of no vibration or noise, when higher is the Speed Loop Gain Value is setting speed response is becoming faster.

If **Cn025** (Load Inertia Ratio) is correctly set then,

S**peed Loop Bandwidth = Sn211** (Speed Loop Gain1) or **Sn213** (Speed Loop Gain2).

Load Inertia Ratio Formula is as below:

$$\text{Load inertia rating} = \frac{\text{Load inertia transforming to motor axis } (J_L)}{\text{Inertia of servo motor rotor } (J_M)} \times 100\%$$

Speed Loop Integration Time Constant

Integral element in Speed Control Loop eliminates the steady state error.

Under the condition of no vibration or noise, reducing the speed loop Integral Time Constant can enhance system rigidity. If the Load Inertia Ratio is very high or the system has vibration factors, ensure that the Speed Loop Integral Time Constant is also high enough, otherwise the mechanical system would produce resonance easily.

Integral Time Constant for Speed Loop can be set using the formula below:

$$\textbf{Sn212}(\text{Integral Time constant 1 of Speed Loop}) \geq 5 \times \frac{1}{2\pi \times \textbf{Sn211}(\text{Speed Loop Gain 1})}$$

Setting Example:

Assume: **Cn025** (Load Inertia Ratio) is correctly set, If target Speed Loop Bandwidth 100Hz,

set **Sn211(**Speed Loop Gain 1)=100(Hz) then

$$\textbf{Sn212}(\text{Integral Time Constant 1 of Speed Loop}) \geq 5 \times \frac{1}{2\pi \times 100} = 40\ (\times 0.2\text{msec})$$

Position Loop Gain

Position Loop Gain has a direct effect on the response speed of Position Loop.

Under the condition that there is no vibration or noise from servo motor, increasing the Position Loop Gain Value can enhance the response speed and hence reduce the positioning time.

Position Loop Feed-Forward Gain

Using Position Loop Feed-Forward Gain can enhance the response speed.

If the Feed-Forward Gain value is set too high, overshooting could occur and cause the **INP** (In Position) output contact to switch ON and OFF repeatedly.

SO monitor Speed Curve and **INP** (In Position Signal) at the same time then increase Feed-Forward Value slowly.

If Position Loop Gain is too high, Feed-Forward function will be insignificant.

Quick Parameters for Gain adjustment

Quick Gain adjust parameters are available for setting manually.

The related Gain Adjust parameters are listed in the Quick-Parameter leaflet for convenient reference.

Quick adjust parameters once altered are saved and become effective **immediately,**

without pressing the Enter-Key. The table below shows the Gain Adjust Quick-Parameters.

Parameter	Name	Default	Unit	Setting Range	Control Mode
◆qn401	Speed Loop Gain 1	40	Hz	10~450	Pe/Pi/S
◆qn402	Integral Time Constant 1 of Speed Loop	100	x0.2 msec	1~500	Pe/Pi/S
◆qn403	Speed Loop Gain 2	40	Hz	10~450	Pe/Pi/S
◆qn404	Integral Time Constant 2 of Speed Loop	100	x0.2 msec	1~500	Pe/Pi/S
◆qn405	Position Loop Gain 1	40	1/s	1~450	Pe/Pi
◆qn406	Position Loop Gain 2	40	1/s	1~450	Pe/Pi
◆qn407	Position Loop Feed-Forward Gain	0	%	0~100	Pe/Pi

Become effective immediately without pressing Enter-Key

5-5-1 Automatic Adjusting

This device provides ON-LINE Auto tuning, which can quickly and precisely measure Load Inertia and adjust the Gain automatically. Setting is according to the table below:

Parameter	Name	Setting	Description	Default	Unit	Setting Range	Control Mode
Cn002.2 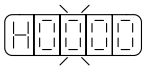	Auto tuning	0	Auto tuning Disabled	0	X	0 | 1	Pe/Pi/S
		1	Enable Auto tuning				

When **Cn002.2 is set to 0 (**Auto tuning Disabled), following Gain adjust parameters must be set.

Parameter Signal	Name
Cn025	Load-Inertia ratio
Sn211	Speed Loop Gain 1
Sn212	Speed-loop Integral time constant 1
Sn213	Speed loop Gain 2
Sn214	Speed loop Integral time constant 2
Pn310	Position Loop Gain 1
Pn311	Position Loop Gain 2
Pn312	Position Loop Feed-Forward Gain

When **Cn002.2 is set to 1** auto tuning is enabled and the Servo controller will adjust the Servo Gain in accordance with **Cn026** (Rigidity Setting) and the measured Load Inertia Ratio by monitor parameter Un-19 (Load Inertia Ratio), when the Load Inertia Ratio is becomes stable,

Then set **0** in **Cn002.2** to cancel Auto tuning. At this moment, servo controller will record the measured Load Inertia Ratio into **Cn025** (Load Inertia Ratio).

If servo drive is used in applications where there is no significant load variations, then monitor **Un-19** (Load Inertia Ratio) if this is stable then it is recommended that Auto tuning is not used.

Apply conditions of Auto tuning

The Servo drive provides Auto tuning and uses an advanced control technique “ON-LINE” to measure the Load Inertia Ratio to control the system to achieve default speed or Position Response Bandwidth.

System must comply with the conditions below, so that the Auto tuning can operate normally.

(1) The timing from stop to 2000rpm needs be less than 1 second.

(2) Motor speed is larger than 200rpm.

(3) Load Inertia needs be 100 times less than the inertia of the motor.

(4) External force or the variation of inertia ratio can not be excessive.

Rigidity Setting

When Auto tuning is used, set the Rigidity Level depending on the various Gain settings for applications such as those listed below:

Rigidity Setting **Cn026**	Position Loop Gain **Pn310 [1/s]**	Speed Loop Gain **Sn211 [Hz]**	Speed-loop Integral time constant 1 **Sn212 [x0.2msec]**	**Mechanical Rigidity**	**Application**
1	15	15	300	**Low**	Machines driven by timing Belt, Chain or Gear: Large Moving Table, Conveyor Belt.
2	20	20	225		
3	30	30	150		
4	40	40	100	**Middle**	The machines driven by Ballscrew through decelerator: Ordinary machines, Mechanics arms, robot arms, conveyor.
5	60	60	75		
6	85	85	50		
7	120	120	40	**High**	The machines driven by Ballscrew: High precision Machines, Metal engraving Machine, Insertion Machine and IC inspection Machine.
8	160	160	30		
9	200	200	25		
A	250	250	20		

Process for Auto tuning

The Diagram below shows the process for Auto tuning.

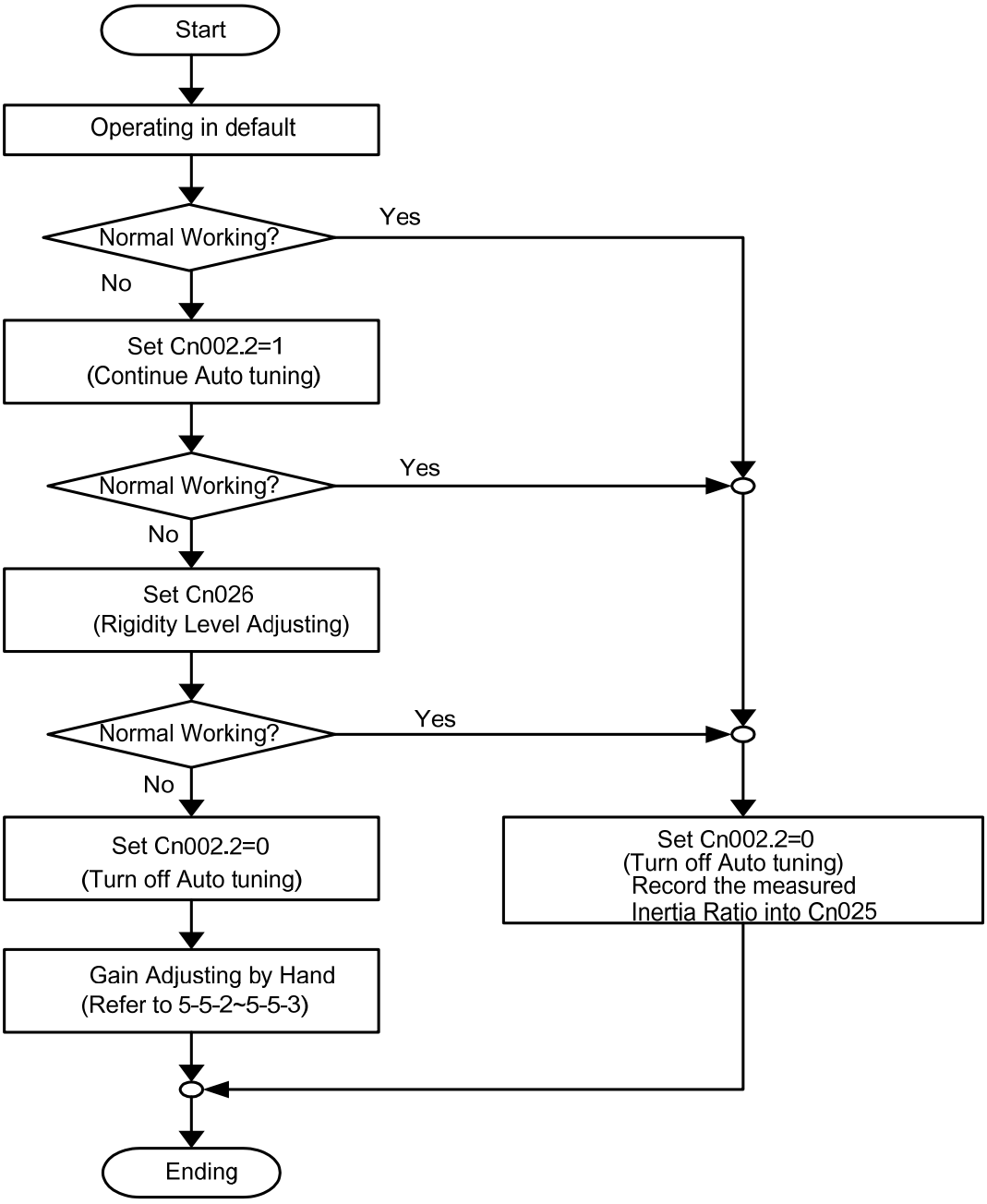

Note: After Auto tuning is complete Set 0 in Cn002.2, otherwise it will not record the present measured Load Inertia Ratio.

If the power is cut off during Auto tuning then when the power is established, Servo controller will use the previously recorded setting of Load Inertia Ratio which is stored in parameter Cn025.

5-5-2 Manual Adjusting

Manual Gain adjustment is made available for applications when auto tune is not providing a good and stable system response, Or a system where there is no significant load variations and the auto tune is not used.

Manual Gain Adjustment in Speed control Mode

Step 1: Set Rigidity level in parameter Cn 26 (See section 5-5-1 for the selection table) and Cn25.

Step 2: If the Servo system includes a host controller which is used for positioning control, then it's **position loop Gain** should be set lower, relative to the servo drive Gain.

Step 3: Adjusting Speed Loop Gain 1 (Sn211):

a) Increase Sn212 (Integral Time Constant 1of Speed Loop). Set a higher value than default or the set value when auto tune was unsuccessful.

b) Increase the Speed Loop Gain (Sn211) until there is no vibration or noise.

c) Then decrease the Speed Loop Gain (Sn211) slowly and increase Position Loop Gain of Host Controller until there is no vibration or noise.

Step 4: Adjusting Speed Loop Integral Time Constant 1 (Sn212):

Set the Integral Time Constant of Speed Loop for minimum time setting that without causing mechanical vibration.

Step 5: Finally, Slowly adjust the Speed Loop Gain, Position Loop Gain of Host Controller and Integral Time Constant of Speed Loop until the servo system provides the best response.

Manual Gain Adjustment in Position Control mode

Step 1: Set Rigidity level in parameter Cn 26 (See section 5-5-1 for the selection table) for the correct **Load Inertia Ratio**.

Step 2: Decrease Position Loop Gain 1 (Pn 310).

Set a lower value than default or the set value when auto tune was unsuccessful.

Set a relatively higher value in Sn212 (Integral Time Constant 1 of Speed Loop).

Step 3: Adjust Speed Loop Gain 1(Sn211).

Increase the Speed Loop Gain until there is no vibration or noise.

Step 4: Adjusting Position Loop Gain 1 (Pn310).

Slowly decrease the Speed Loop Gain again, then increase the Position Loop Gain until there is no vibration or noise.

Step 5: Adjusting Speed Loop Integral Time Constant 1 (Sn212).

Set the Integral Time Constant of Speed Loop for a minimum time without causing mechanical vibration.

Step 6: Finally, slowly adjusting the Speed Loop Gain, Position Loop Gain and the Integral Time Constant of Speed Loop until the servo system provides the best response.

5-5-3 Improving Resonance

The Servo drive provides the function of Gain Switching and Position Loop Feed-Forward Gain to improve system response.

Note: Both of these features must be used correctly to improve system response, otherwise the response will become worse. Refer to the description below:

Gain Switch

Following Gain Switching features are provided:-

a) Speed Loop Gain PI/P Switching

b) 2-stage Gain Switching.

Purposes list:

(1) To restrict overshoot during acceleration/deceleration in speed control.

(2) Reducing the in position oscillations and providing shorter settling time in position control.

(3) Decrease the noise caused when using Servo Lock.

For further details refer to section **5-3-11.**

Position Loop Feed-Forward Gain

Position Loop Feed-Forward Gain can be used to reduce the error result from position control and improve the response speed.

Position loop Feed forward gain and position loop gain should be matched with. If adjusting to higher position loop gain, the feed fordward gain can be ignored. Oppositly, if the loop gain value is setting for a relatively low level, adjust position loop feed forward gain will improve system response time obviously.

The adjustment steps are as follows:

Step 1: Refer to the procedures in sections **5-5-1~5-5-2** to adjust Speed and Position Gain.

Step 2: Increase **Pn312**(Position Feed-Forward Gain) slowly, and observe the **INP** (Output Signal of In Position) at the same time and INP output should be activated faster.

Note: The Position Loop Feed-Forward Gain can not be set too high, otherwise it will cause speed overshooting and **INP** (In Position output signal) will be switching On/Off repeatedly.

5-6 Other Functions

5-6-1 Programmable I/O Functions

Digital Inputs.

There are 6 DI (Digital Inputs) contacts and 3 DO (Digital Outputs) contacts which are programmable as listed below:

Parameter	Name			Default	Unit	Setting Range	Control Mode
★Hn501.0 ★Hn501.1 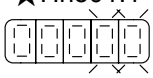	**DI-1** Digital Input 1 programmable Functions			01	X	01 | 1C (HEX)	ALL
	Setting	**Description**					
		Signal	Contactor Function				
	01	**SON**	Servo On				
	02	**ALRS**	Alarm Reset				
	03	**PCNT**	PI/P Switching				
	04	**CCWL**	CCW Limit				
	05	**CWL**	CW Limit				
	06	**TLMT**	External Torque Limit				
	07	**CLR**	Clear Pulse Error Value				
	08	**LOK**	Servo Lock				
	09	**EMC**	Emergency Stop				
	0A	**SPD1**	Speed 1				
	0B	**SPD2**	Speed 2				
	0C	**MDC**	Control Mode Switch				
	0D	**INH**	Position Command Inhibit				
	0E	**SPDINV**	Speed Inverse				
	0F	**G-SEL**	Gain Select				
	10	**GN1**	Electronic Gear Ratio Numerator 1				
	11	**GN2**	Electronic Gear Ratio Numerator 2				
	12	**PTRG**	Position Trigger				
	13	**PHOLD**	Position Hold				
	14	**SHOME**	Start Home				
	15	**ORG**	Home Position Reference (Origin)				
	16	**POS1**	Internal Position select 1				
	17	**POS2**	Internal Position select 2				
	18	**POS3**	Internal Position select 3				
	19	**POS4**	Internal Position select 4				
	1A	**TRQINV**	Torque Inverse				
	1B	**RS1**	Torque CW Selecting				
	1C	**RS2**	Torque CCW Selecting				
★Hn501.2 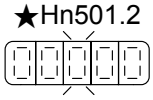	**DI-1 Logic State NO/NC Selection**			0	X	0 | 1	
	Setting	**Description**					
	0	Input contact state. NO (Normally Open). Connecting (IG24) to inputs, enables the selected function.					
	1	Input contact state. NC (Normally Closed). Disconnecting (IG24) from inputs, enables the selected function.					

New setting will become effective after re-cycling the power.

Digital Inputs 2 to 6 (Hn 502 to Hn 506). Are programmable and the logic state NO/NC can also be selected same as that shown for digital input 1. See Hn501.

Parameter	Name & Function			Default	Unit	Setting Range	Control Mode
★Hn502	**DI-2 Programmable Digital input Selection** Please refer to **Hn501**			002	X	001 | 11C	ALL
★Hn503	**DI-3 Programmable Digital input Selection** Please refer to **Hn501**			003	X	001 | 11C	ALL
★Hn504	**DI-4 Programmable Digital input Selection** Please refer to **Hn501**			008	X	001 | 11C	ALL
★Hn505	**DI-5 Programmable Digital input Selection** Please refer to **Hn501**			00A	X	001 | 11C	ALL
★Hn506	**DI-6 Programmable Digital input Selection** Please refer to **Hn501**			006	X	001 | 11C	ALL
★Hn507.0 ★Hn507.1 H0000	**DO-1 Programmable Digital Output Selection**			007	X	001 | 11C	ALL
	Setting	Explanation					
		Signal	Functions	01	X	01 | 08	ALL
	01	**RDY**	Servo Ready				
	02	**ALM**	Alarm				
	03	**ZS**	Zero Speed				
	04	**BI**	Brake Signal				
	05	**INS**	In Speed				
	06	**INP**	In Position				
	07	**HOME**	HOME				
	08	**INT**	In Torque				
★Hn507.2 H0000	**DO-1 Digital Output Logic State.**			0	X	0 | 1	
	Setting	Explanation					
	0	Close, when the output is activated.					
	1	Open, when the output is activated.					
★Hn508	**DO-2 Programmable Digital Output Selection** Please refer to **Hn507**			002	X	001 | 108	ALL
★Hn509	**DO-3 Programmable Digital Output Selection** Please refer to **Hn507**			003	X	001 | 108	ALL

Warning!

1. If any of programmable Inputs of DI-1 ~ DI-6 are set for the same type of function then the logic state selection (NO or NC selection) for these inputs must be the same type.
   Otherwise an Alarm will be displayed. AL-07 (**Multi-function contact setting error**).
2. When programmable DO-1 ~ DO-3 are set for the same type of function alarm will be displayed.
   AL-07 (**Multi-function contact setting error**).

5-6-2 Switch for the Control Mode

Set one of the programmable input terminals to MDC (Control mode) selection.

The input then will select the preset control mode, which is set by Parameter Cn001.

Selections are listed below:

Parameter	Name	Setting	Description		Control Mode
★Cn001	Control Mode Selection		**MDC Input off**	**MDC Input On**	ALL
		3	Position Control (External Pulse Command)	Speed Control	
		4	Speed Control	Torque Control	
		5	Position Control (External Pulse Command)	Torque Control	

New setting will become effective after re-cycling the power.

Please check 5-6-1 to setting the input contact required high /Low signal levels (PNP/NPN selection).

5-6-3 Auxiliary Functions

Function of Input Contacts SON, CCWL and CWL can be set according to the list below:-

Parameter	Name	Setting	Description	Control Mode
★Cn002.0 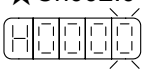	**SON** (Servo ON)	0	Use input contact **SON** to switch Servo On.	ALL
		1	Servo on with Power on. **SON** input contact not required**.**	
Cn002.1 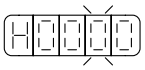	**CCWL** and **CWL** (Counter Clockwise & Clockwise Limits)	0	**CCWL** and **CWL(external limits) are effective.** CCW and CW rotation is inhibited by CCWL&CWL.	ALL
		1	**CCWL** and **CWL(external limits) are ineffective.** CCW&CW rotation is not limited by CCWL&CWL.	

. ***New setting will become effective after re-cycling the power.***

5-6-4 Brake Mode

Brake function for servo motor and the external mechanical brake if it is used can be set according to the table below. Set the brake mode as required for Servo off, Emergency Stop and CCW/CW rotation inhibit functions.

Parameter	Name			Default	Unit	Setting Range	Control Mode
Cn008	Brake Mode Selectable Brake modes for Servo off, EMC and CCW/CW drive inhibit.			0	X	0 | 1	ALL
	Setting	Explanation					
		Dynamic brakes	Mechanical brakes				
	0	No	No				
	1	No	Yes				

5-6-5 Timing Diagram of Mechanical Brake

In applications with vertical loading, if the power is turned off, to prevent the load from falling due to gravity, a servo motor with electro-mechanical brake can be used.

This servo drive provides a brake output (**BI)** which can be used for controlling the external brake.

Timing of brake output signal can be set by parameter **Cn003** (Output Time for electro-mechanical Brake).

Typical Circuit Diagram

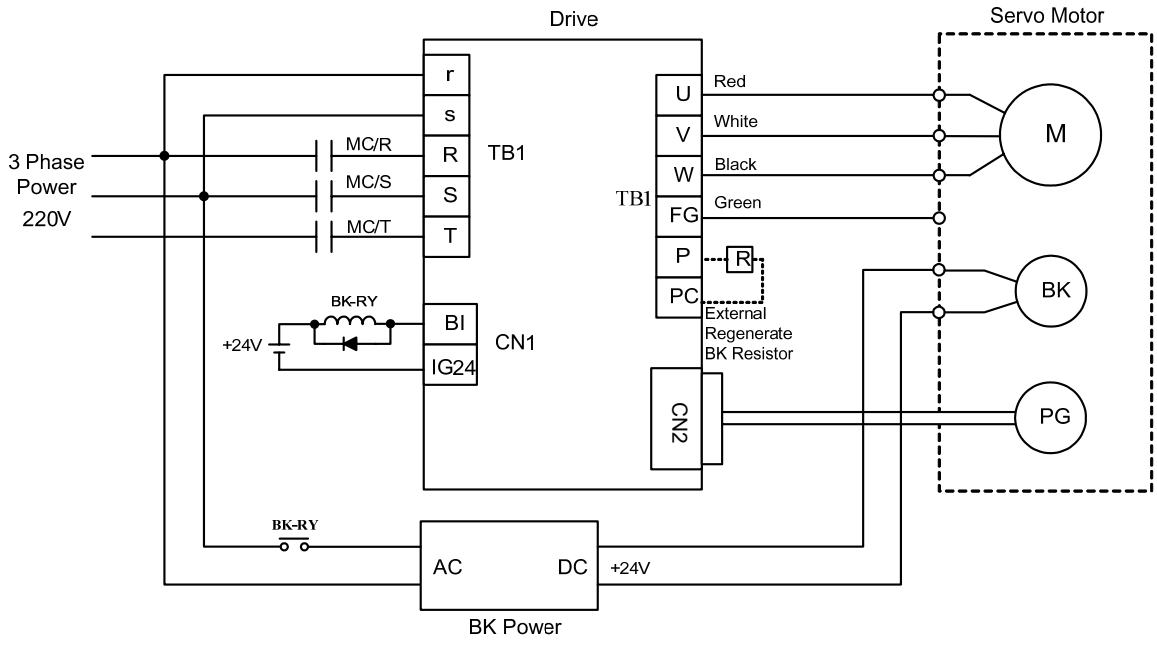

Timing for Brake output signal

Set the required time for the operation of brake output signal (BI) according to the following.
BI output can be used to control the function of an external electro-mechanical brake.

Parameter	Name	Default	Default	Setting Range	Control Mode
Cn003	Output time setting for Mechanical Brake Signal	0	msec	-2000~2000	ALL

Note!

To use brake output signal set Cn008 (Brake mode) to selections 1 as required.
When the servo system has vertical loading, please set Cn003 to a **Positive** Number.
For definition of a time value with a positive or a negative sign refer to the following notes and timing diagrams.

(1) **Cn003 set to a time value with a Positive sign.**

AS soon as the input contact SON is switched on, Servo on is activated at the same time, then after a time delay set by parameter Cn003,Output Contact BI is switched on. (Signal to release the brake).

When SON input contact is switched off, BI output contact is also switched off (Signal to operate the brake).
Then after a time delay set by parameter Cn003, Servo ON is de-activated.

(2) **Cn003 set to a time value with a Negative sign.**

AS soon as the input contact SON is switched on, Output Contact BI is switched on at the same time. (Signal to release the brake). then after a time delay set by parameter Cn003, Servo on is activated.

When SON input contact is switched off, Servo ON is de-activated at the same time.
After a time delay set by parameter Cn003, Output Contact BI is switched off. (Signal to operate the brake).

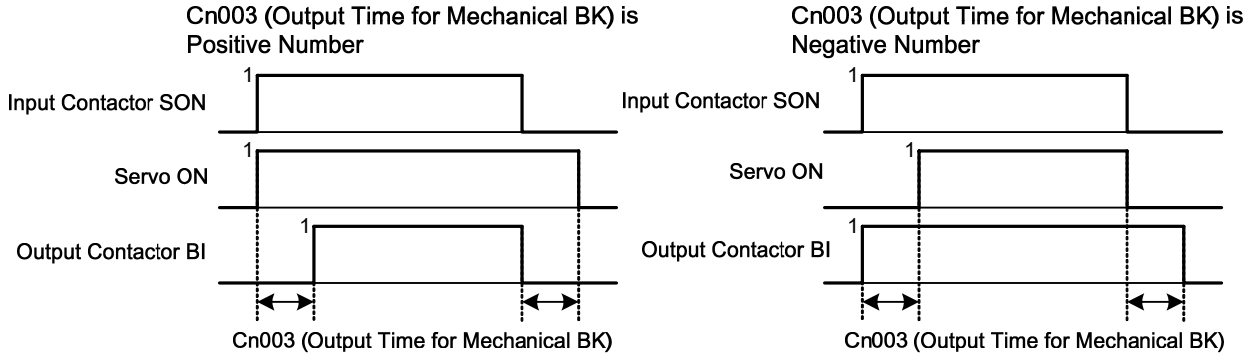

Note: Input contacts status of above time sequence diagram "1" (ON) and "0" (OFF).
Please check 5-6-1 to set the required high /Low signal levels (PNP/NPN) selection.

5-6-6 CW/CCW Drive Inhibit Function

Stopping method of the servo motor as a result of **CW/CCW Inhibit** function can be selected according to the list below:

Parameter	Name		Default	Unit	Setting Range	Control Mode
★Cn009	CW/CCW drive inhibit mode		0	X	0 | 2	ALL
	Setting	Explanation				
	0	When torque limit reached the setting value of (**Cn010, Cn011**), servo motor deceleration to stop in the zero clamp condition.				
	1	Reserve parameter				
	2	Once max torque limit (± 300%) is detected then deceleration to stop, zero clamp is applied when stop.				

. ***New setting will become effective after re-cycling the power.***

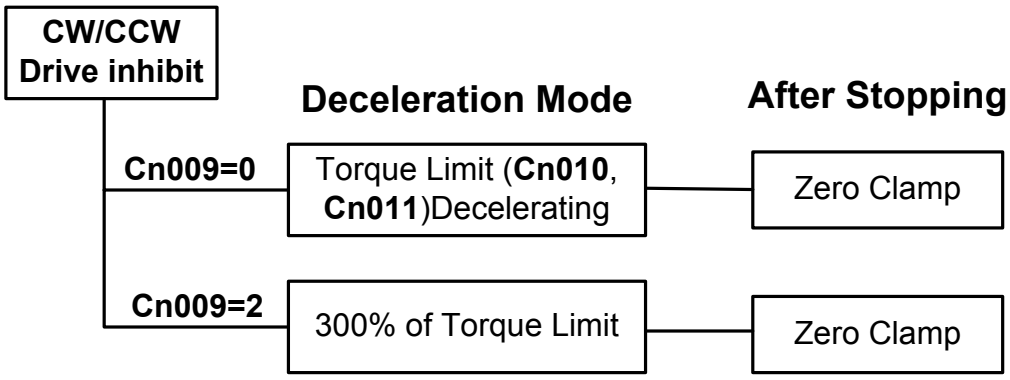

5-6-7 Selecting for External Regeneration Resistor

In applications where a high inertia load is stopped rapidly, motor will generate an energy, which is regenerate power back to the servo drive (Regeneration energy)

(1) Short deceleration time with heavy loads.
(2) In vertical load applications.
(3) High inertia rotary load applied to the motor shaft.

Part of the regeneration power will be absorbed by the drive main smoothing capacitors
If there is too much regeneration power which can not be totally absorbed by the capacitor then regeneration resistors can be used to absorb the excess power.

Install a regeneration resistor for the repid deceleration and vertical motion control when the main circuit DC link voltage is high.
Install a external regeneration resistor then make sure the resistance equip externally and built-in regeneration resistor has the same resistance.
In order to prevent servo drive possible error, external or built-in regeneration resistance value should greater than following table.

Built-in Regeneration Resistor specification is as below table.

Drive Mode	Minimum allowed Resistance Value (Ω)
JSDE-10	**23**
JSDE-15	**23**
JSDE-20	**23**
JSDE-30	**23**

Setting for the Power of External Regeneration Resistor

When using external regeneration resistor, the power value (Watts) must be set in parameter **Cn012.**

Parameter	Name	Default	Unit	Setting Range	Control Mode
Cn012	**Power setting for External Regeneration Resistor** Refer to section 5-6-7 to choose external Regeneration resister and set its power specification in Watts of Cn012.	0	W	0 | 10000	ALL

Wiring for External Regeneration Resistor

When external Regeneration Resistor is used, must remove the link between **PC** and **P1** on **TB1** Terminal.

Then the resistor should be installed between terminals **P** and **PC**.

For safety, use of resistors with thermal protection is recommended.

The thermal switch contact can then be interlocked to disable drive or remove power if necessary.

Refer to connection diagram below:

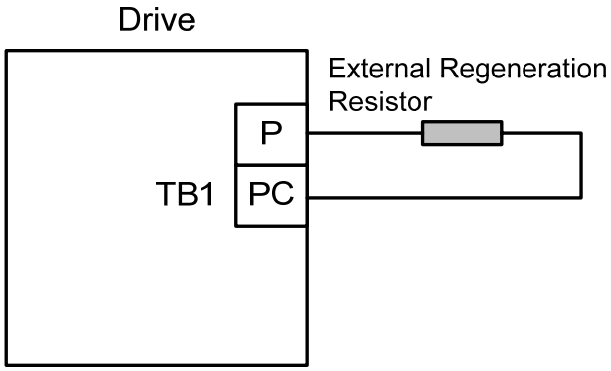

When installing Regeneration Resistors care must be taken as the resistor absorbs the regeneration power, and it is possible to generate the high temperatures above 100°C.

Provide the necessary cooling and use appropriate high temperature wires and ensure there has enough space between regeneration resistor and other materials.

Calculation of the external regeneration resistor power (Watts).

Calculate the resistor watts according to the information and formulas below:

(Energy consumed by the motor internally is ignored).

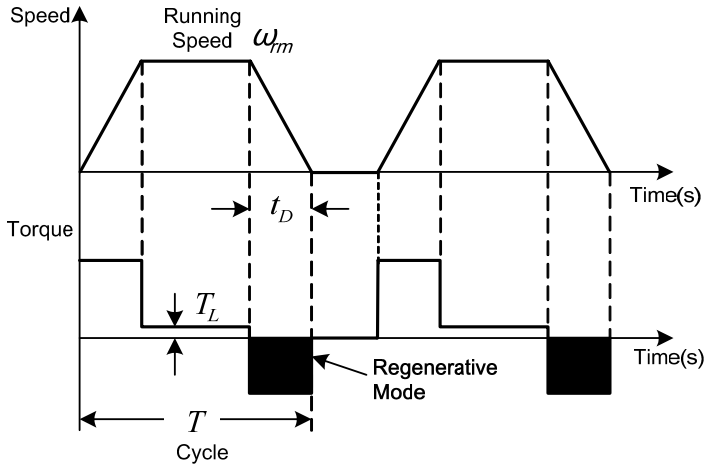

Step	Item	Formula	Description
1	Calculate the working Energy of the servo system.	$E_M = J_T \omega_{rm}^2 / 182$	E_M : Working Energy of Servo system (J) J_T : Inertia applied to the motor shaft ($kg \bullet m^2$) ω_{rm} : Motor running Speed(rpm)
2	Calculate the Energy consumption by the load during deceleration.	$E_L = (\pi / 60)\omega_{rm} T_L t_D$	E_L : The Energy during deceleration (J) T_L : Loading Torque(Nm) t_D : The Time from deceleration to stopping(s)
3	Calculate the Energy absorbed by internal main capacitor.	E_C Check the diagram above	E_C : The Energy absorbed by the main capacitor (J)
4	Calculate the Energy which regeneration resistor consumes	$E_R = E_M - (E_L + E_C)$	E_R : The Energy which Regeneration Resistor consumes (J)
5	Calculate the Power for regeneration resistor	$P_R = (E_R / T) / 0.4$	P_R : Regeneration Resistor Power(W) T : Operating cycle for servo system(s)

Note 1 : 0.4 in the formula for P_R corresponds to 40% regeneration duty cycle.

Note 2: If the E_L **can not be calculated, then let** $E_L = 0$ **, then calculate** E**R .**

In applications with regenerative loads, which cause reverse torque, a large amount of energy will flow back to the driver.

In such applications, calculate ER and hence regeneration resistor power according to the formula below.

Item	Formula	Description for Symbols
Calculate the working Energy during the continuous regenerative period.	$E_G = (\pi / 60)\omega_{rm,G} T_G t_G$	E_G : Working Energy during the regenerative period. (J) $\omega_{rm,G}$: Motor running speed during the regenerative period . (rpm) T_G : Loading Torque during the regenerative period (Nm) t_G : Regenerative Time. (s)

The formula for step 4 in the previous table will be: $E_R = E_M - (E_L + E_C) + E_G$

5-6-8 Fan Setting

Availabel models that equipped with the fan.

Parameter	Name		Default	Unit	Setting Range	Control Mode
Cn031	**Cooling fan running modes** (Only available for the model which equip with fan.)		1	X	1 | 3	ALL
	Setting	Explanation				
	1	Run when Servo ON.				
	2	Always Running.				
	3	Disabled.				

5-6-9 Factory setting parameter

This parameter can reset all parameter settings to default value (factory reset).

Parameter	Name		Default	Unit	Setting Range	Control Mode
★Cn029	Reset parameters		0	X	0 | 1	ALL
	Setting	**Description**				
	0	Disabled				
	1	Reset all Parameters to default (Factory setting)				

New setting will become effective after re-cycling the power.

Chapter 6 Parameter

6-1 Explanation of Parameter groups.

There are 9 groups of parameters as listed below.

Symbol	Description
Un-xx	Status Display Parameters.
dn-xx	Diagnostics Parameters.
AL-xx	Alarm Parameters
Cn-xx	System Parameters
Tn1xx	Torque Control Parameters
Sn2xx	Speed Control Parameters
Pn3xx	Position Control Parameters
qn4xx	Quick Set-up Parameters
Hn5xx	Multi-function I/O parameters

Control Mode Code

Signal	Control Mode
ALL	All Control Mode
Pi	Position Control Mode(Internal Positional Command)
Pe	Position Control Mode(External Pulse Command)
S	Speed Control Mode
T	Torque Control Mode

Definition of Symbols.

Symbol	Explanation
★	Parameter becomes effective after recycling the power.
◆	Parameter is Effective without pressing the Enter key.

6-2 Parameter Display Table

Diagnosis Parameter

Parameter	Name & Function
dn-01	Control mode display
dn-02	Output terminal signal status.
dn-03	Input terminal signal status.
dn-04	Software version (CPU version)
dn-05	JOG mode operation
dn-06	Hold position.
dn-07	Auto offset adjustment of external analog command voltage.
dn-08	Servo model code.
dn-09	ASIC software version display

Display Parameter

Parameter	Display	Unit	Explanation
Un-01	Actual Motor Speed	rpm	Motor Speed is displayed in rpm.
Un-02	Actual Motor Torque	%	It displays the torque as a percentage of the rated torue. Ex: 20 are displayed. It means that the motor torque output is 20% of rated torque.
Un-03	Regenerative load rate	%	Value for the processable regenerative power as 100% . Displays regenerative power consumption in 10-s cycle.
Un-04	Accumulated load rate	%	Value for the rated torque as 100%. Displays effective torque in 10-s cyle.
Un-05	Max load rate	%	Max value of accumulated load rate
Un-06	Speed Command	rpm	Speed command is displayed in rpm.
Un-07	Position Error Value	pulse	Error between position command value and the actual position feedback.
Un-08	Position Feed-back Value	pulse	The accumulated number of pulses from the encoder.
Un-09	ExternalVoltage Command	V	External analog voltage command value in volts.
Un-10	(Vdc Bus)Main Loop Voltage	V	DC Bus voltage in Volts.
Un-11	External Spped Limit Command Value	rpm	External speed limit value in rpm.
Un-12	External CCW Torque Limit Command Value	%	Ex: Display 100. Means current external CCW torque limit command is set to 100 %.
Un-13	External CW Torque LimitCommand Value	%	Ex: Display 100. Means current external CW toque limit command is set to 100%.
Un-14	Motor feed back – Rotation value (absolute value)	rev	After power on, it displays motor rotation number as an absolute value.
Un-15	Motor feed back – Less then 1 rotation pulse value(absolute value)	pulse	After power on, it displays the number of pulses for an incomplete revolution of the motor as an absolute value.
Un-16	Pulse command – rotation value(absolute value)	rev	After power on, it displays pulse command input rotation number in absolute value.
Un-17	Pulse command – Less then 1 rotation pulse value(absolute value)	pulse	After power on, it displays pulse command input for an incomplete rotation. pulse value is an absolute value.
Un-18	Torque command	%	It displays the torque command as a percentage of the rated torque. Ex: Display. 50.Means current motor torque command is 50% of rated torque.
Un-19	Load inertia	x0.1	When Cn002.2=0(Auto gain adjust disabled), it displays the current preset load inertia ratio from parameter Cn025. When Cn002.2=1(Auto gain adjust enabled), it displays the current estimated load inertia ratio.

System Parameters

Parameter	Name & Function	Default	Unit	Setting Range	Control Mode	Chapter
★Cn001	**Control Mode selection** Setting: Explanation 0: Torque Control 1: Speed Control 2: Position Control (external pulse Command) 3: Position/Speed Control Switching 4: Speed/Torque Control Switching 5: Position/Torque Control Switching 6: Position Control (internal position Command)	2	X	0 | 6	ALL	5-1 5-6-2
★Cn002.0	**SON (Servo On) Input contact function** Setting: Explanation 0: Input Contact, Enables SON (Servo On). 1: Input Contact has no function. (SON is enabled when Power on).	0	X	0 | 1	ALL	5-6-3
Cn002.1	**CCWL & CWL Input contact function.** Setting: Explanation 0: CCWL and CWL input contacts are able to control the drive inhibit of CCW and CW. 1: CCWL & CWL input contacts are not able to control CCW and CW drive inhibit. CCW and CW drive inhibit is disable.	1	X	0 | 1	ALL	5-6-3
Cn002.2	**Auto Tuning** Setting: Explanation 0: Continuously Auto Tuning is Disable 1: Continuously Auto Tuning is Enabled.	0	X	0 | 1	Pi Pe S	5-5-1
★Cn002.3	**EMC reset mode selection** Setting: Explanation 0: Reset EMC signal is only available in Servo Off condition (SON contact is open) and reset AL-09 by ALRS signal. P.S.) It is NOT allow to reset when SON is applied. 1: When EMC status is released, AL-09 can be reset on both Servo ON and Servo OFF conditions. Attention! Ensure that the speed command are removed before the alarm is reset to avoid motor unexpected start.	0	X	0 | 1	ALL	

<table>
<tr><th>Parameter</th><th>Name & Function</th><th>Default</th><th>Unit</th><th>Setting Range</th><th>Control Mode</th><th>Chapter</th></tr>
<tr><td>Cn003</td><td>Output time setting for Mechanical Brake Signal
Brake Signal Timing Sequence :
Cn003 (machinery brake signal output time) is positive
 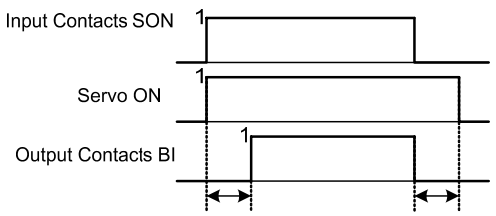

Cn003 (machinery brake signal output time)
Cn003 (machinery brake signal output time) is negative
 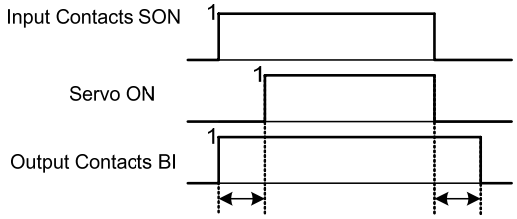

Cn003 (machinery brake signal output time)
Implementation a pin for dynamic brake signal(BI) as a output signal before to perform this function. Refer to sequence diagram above.
Note: Signal logic level status: 1 = ON. 0 = OFF.
Refer to Hn501.2 ~ Hn506.2 for setting contact the high & Low logic levels.</td><td>0</td><td>msec</td><td>-2000
|
2000</td><td>ALL</td><td>5-6-5</td></tr>
<tr><td>Cn004</td><td>Motor rotate direction.(Inspect from the load side)
 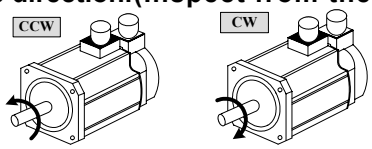

When Torque or Speed Command value is Positive, the setting of Motor retation direction are:
<table><tr><th rowspan="2">Setting</th><th colspan="2">Explanation</th></tr><tr><th>Torque Control</th><th>Speed Control</th></tr><tr><td>0</td><td>Counter ClockWise(CCW)</td><td>Counter ClockWise (CCW)</td></tr><tr><td>1</td><td>ClockWise (CW)</td><td>Counter ClockWise (CCW)</td></tr><tr><td>2</td><td>Counter ClockWise (CCW)</td><td>ClockWise(CW)</td></tr><tr><td>3</td><td>ClockWise (CW)</td><td>ClockWise (CW)</td></tr></table></td><td>0</td><td>X</td><td>0
|
3</td><td>S
T</td><td>5-2-4
5-3-7</td></tr>
</table>

<table>
<tr><th>Parameter</th><th>Name & Function</th><th>Default</th><th>Unit</th><th>Setting Range</th><th>Control Mode</th><th>Chapter</th></tr>
<tr><td>★Cn005</td><td>Encoder pulse output scale (Dividend)
For default set to the rated encoder number of pulses per revolution, such as 2500ppr.
Encoder ppr can be scaled by setting a ppr in the range of 1 to the rated ppr of the encoder for scaling purpose.
PPR = Pulse per revolution.
Ex:encorder rated precision is 2000 ppr, If you setting Cn005 =2, the output is 1000ppr.</td><td>1</td><td>X</td><td>1
|
63</td><td>ALL</td><td>5-3-5</td></tr>
<tr><td>Cn006</td><td>Reserve parameter</td><td>—</td><td>—</td><td>—</td><td>—</td><td>—</td></tr>
<tr><td>Cn007</td><td>Speed reached preset.
Speed preset level for CW or CCW rotation.
When the speed is greater then preset level in Cn007 the Speed reached output signal INS will be activated.</td><td>Rated rpm × 1/3</td><td>rpm</td><td>0
|
4500</td><td>S
T</td><td>5-3-12</td></tr>
<tr><td>Cn008</td><td>Brake Mode
Selectable Brake modes for Servo off, EMC and CCW/CW drive inhibit.
Setting | Explanation
Dynamic brakes | Mechanical brakes
0 | No | No
1 | No | Yes</td><td>0</td><td>X</td><td>0
|
1</td><td>ALL</td><td>5-6-4</td></tr>
<tr><td>★Cn009</td><td>CW/CCW drive inhibit mode
Setting | Explanation
0 | When torque limit reached the setting value of (Cn010,Cn011), servo motor deceleration to stop in the zero clamp condition.
1 | Reserve parameter
2 | Once max torque limit (± 300%) is detected then deceleration to stop, zero clamp is applied when stop.</td><td>0</td><td>X</td><td>0
|
2</td><td>ALL</td><td>5-6-6</td></tr>
<tr><td>Cn010</td><td>CCW Torque command Limit.
Ex: For a torque limit in CCW direction which is twice the rated torque , set Cn10=200.</td><td>300</td><td>%</td><td>0
|
300</td><td>ALL</td><td>5-2-5
5-3-10</td></tr>
<tr><td>Cn011</td><td>CW Torque command Limit.
Ex: For a torque limit in CW direction which is twice the rated torque , set Cn11=-200.</td><td>-300</td><td>%</td><td>-300
|
0</td><td>ALL</td><td>5-2-5
5-3-10</td></tr>
<tr><td>Cn012</td><td>Power setting for External Regeneration Resistor
Refer to section 5-6-7 to choose external Regeneration resister and set its power specification in Watts of Cn012.</td><td>0</td><td>W</td><td>0
|
10000</td><td>ALL</td><td>5-6-7</td></tr>
<tr><td>Cn013</td><td>Frequency of resonance Filter (Notch Filter).
Enter the vibration frequency in Cn013, to eliminate system mechanical vibration.</td><td>0</td><td>Hz</td><td>0
|
1000</td><td>Pi
Pe
S</td><td>5-3-9</td></tr>
<tr><td>Cn014</td><td>Band Width of the Resonance Filter.
Adjusting the band width of the frequency, lower the band width value in Cn014, restrain frequency Band width will be wider.</td><td>7</td><td>X</td><td>1
|
100</td><td>Pi
Pe
S</td><td>5-3-9</td></tr>
</table>

Parameter	Name & Function	Default	Unit	Setting Range	Control Mode	Chapter
Cn015.0	**PI/P control switch mode.** Setting: Explanation 0: Switch from PI to P if the **torque** command is greater than **Cn016.** 1: Switch from PI to P if the **speed** command is greater than **Cn017.** 2: Switch from PI to P if the **acceleration** rate is greater than **Cn018.** 3: Switch from PI to P if the **position error** is greater than **Cn019.** 4: Switch from PI to P be the input contact **PCNT**. Set one of the multi function terminals to active.	4	X	0 | 4	Pi Pe S	5-3-11
Cn015.1 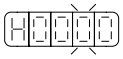	**Automatic gain 1& 2 switch** Setting: Explanation 0: Switch from gain 1 to 2 if **torque** command is greater than **Cn021.** 1: Switch from gain 1 to 2 if **speed** command is greater than **Cn022.** 2: Switch from gain 1 to 2 if **acceleration** command is greater than **Cn023.** 3: Switch from gain 1 to 2 if **position error** value is greater than **Cn024.** 4: Switch from gain 1 to 2 by input contact **G-SEL.**	4	X	0 | 4		
Cn016	**PI/P control mode switch by Torque Command** Set the **Cn015.0=0** first. If Torque Command is less than Cn016 PI control is selected. If Torque Command is greater than Cn016 P control is selected.	200	%	0 | 399	Pi Pe S	5-3-11
Cn017	**PI/P control mode switch by Speed Command** Set the **Cn015.0=1 first.** If Speed Command is less than **Cn017** PI control is selected. If Speed Command is greater than **Cn017** P control is selected.	0	rpm	0 | 4500	Pi Pe S	5-3-11
Cn018	**PI/P control mode switch by accelerate Command** Set the **Cn015.0=2 first.** If Acceleration is less than **Cn018** PI control is selected. If Acceleration is greater than **Cn018** P control is selected.	0	rps/s	0 | 18750	Pi Pe S	5-3-11
Cn019	**PI/P control mode switch by position error number** Set the **Cn015.0=3 first**. If Position error value is less than **Cn019** PI control is selected. If Position error value is greater than **Cn019** P control is selected.	0	pulse	0 | 50000	Pi Pe S	5-3-11

Parameter	Name & Function	Default	Unit	Setting Range	Control Mode	Chapter
Cn020	**Automatic gain 1& 2 switch delay time.** Speed loop 2 to speed loop 1, Change over delay, when two control speed loops (P&I gains 1 & 2) are used.	0	x02 msec	0 | 10000	Pi Pe S	5-3-11
Cn021	**Automatic gain 1& 2 switch condition (Torque command)** Set **Cn015.1=0 first.** When torque command is less than **Cn021**, Gain 1 is selected. When torque command is greater than **Cn021,** Gain 2 is selected When **Gain 2** is active and torque command becomes less than **Cn021** setting value**,** system will automatically switch back to **Gain 1** switch time delay can be set by Cn020.	200	%	0 | 399	Pi Pe S	5-3-11
Cn022	**Automatic gain 1& 2 switch condition (Speed Command)** Set the **Cn015.1=1 first.** When speed command is less than Cn022 Gain 1 is selected. When speed command is greater than Cn022 Gain 2 is selected. When **Gain 2** is active and speed command becomes less than **Cn022** setting value**,** system will automatically switch back to **Gain 1** the switch time delay can be set by Cn020.	0	rpm	0 | 4500	Pi Pe S	5-3-11
Cn023	**Automatic gain 1& 2 switch condition (Acceleration Command)** Set **Cn015.1=2** first. When acceleration command is less than Cn023 Gain 1 is selected. When acceleration command is greater than Cn023 Gain 2 is selected. When **Gain 2** is active and acceleration command becomes less than **Cn023** system will automatically switch back to **Gain 1** the switch time delay can be set by Cn020.	0	rps/s	0 | 18750	Pi Pe S	5-3-11
Cn024	**Automatic gain 1& 2 switch condition (Position error value)** Set **Cn015.1=3** first. When position error value is less than Cn024 Gain 1 is selected. When position error value is greater than Cn024 Gain 2 is selected. When **Gain 2** is active and position error value becomes less than **Cn024** system will automatically switch back to **Gain 1** and the switch time delay can be set by Cn020.	0	pulse	0 | 50000	Pi Pe S	5-3-11

<table>
<tr><th>Parameter</th><th>Name & Function</th><th>Default</th><th>Unit</th><th>Setting Range</th><th>Control Mode</th><th>Chapter</th></tr>
<tr><td>Cn025</td><td>Load-Inertia ratio
$LoadInertiaRatio = \frac{LoadInertiaToMotor(J_L)}{MotorRotorInertia(J_M)} \times 100\%$</td><td>40</td><td>x0.1</td><td>0
|
1000</td><td>Pi
Pe
S</td><td>5-5</td></tr>
<tr><td>Cn026
 </td><td>Rigidity Setting
When Auto tuning is used, set the Rigidity Level depending on the various Gain settings for applications such as those listed below:
<table>
<tr><th rowspan="2">Setting</th><th colspan="3">Explanation</th></tr>
<tr><th>Position Loop Gain
Pn310 [1/s]</th><th>Speed Loop Gain
Sn211 [Hz]</th><th>Speed Loop Integral-Time Constant
Sn212 [x0.2msec]</th></tr>
<tr><td>1</td><td>15</td><td>15</td><td>300</td></tr>
<tr><td>2</td><td>20</td><td>20</td><td>225</td></tr>
<tr><td>3</td><td>30</td><td>30</td><td>150</td></tr>
<tr><td>4</td><td>40</td><td>40</td><td>100</td></tr>
<tr><td>5</td><td>60</td><td>60</td><td>75</td></tr>
<tr><td>6</td><td>85</td><td>85</td><td>50</td></tr>
<tr><td>7</td><td>120</td><td>120</td><td>40</td></tr>
<tr><td>8</td><td>160</td><td>160</td><td>30</td></tr>
<tr><td>9</td><td>200</td><td>200</td><td>25</td></tr>
<tr><td>A</td><td>250</td><td>250</td><td>20</td></tr>
</table></td><td>4</td><td>X</td><td>1
|
A</td><td>Pi
Pe
S</td><td>5-5-1</td></tr>
<tr><td>Cn027</td><td>Reserve parameter</td><td>—</td><td>—</td><td>—</td><td>—</td><td>—</td></tr>
<tr><td>Cn028</td><td>Reserve parameter</td><td>—</td><td>—</td><td>—</td><td>—</td><td>—</td></tr>
<tr><td>★Cn029</td><td>Reset parameters.
<table>
<tr><th>Setting</th><th>Explanation</th></tr>
<tr><td>0</td><td>Disabled</td></tr>
<tr><td>1</td><td>Reset all Parameters to default (Factory setting)</td></tr>
</table></td><td>0</td><td>X</td><td>0
|
1</td><td>ALL</td><td>5-6-10</td></tr>
<tr><td>★Cn030
 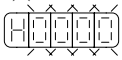 </td><td>Servo motor model code
Servo model code can be display and checked with parameter dn-08, refer 3-2-2 dn-08 table for more information. (refer to chapter 1-1-3)
Attention：Before operate your servo motor, check this parameter setting is compatible for servo drive and motor. If there has any incompatible problem contact supplier for more information.</td><td>Default</td><td>X</td><td>X</td><td>ALL</td><td>3-2-2</td></tr>
<tr><td>Cn031</td><td>Cooling fan running modes
(Only available for the model which equip with fan.)
<table>
<tr><th>Setting</th><th>Explanation</th></tr>
<tr><td>1</td><td>Run when Servo ON.</td></tr>
<tr><td>2</td><td>Always Running.</td></tr>
<tr><td>3</td><td>Disabled.</td></tr>
</table></td><td>1</td><td>X</td><td>1
|
3</td><td>ALL</td><td>5-6-8</td></tr>
</table>

Parameter	Name & Function	Default	Unit	Setting Range	Control Mode	Chapter
Cn032	**Speed feed back smoothing filter** Restrain sharp vibration noise by the setting and this filter also delay the time of servo response.	500	Hz	1 | 1000	Pe Pi S	5-3-12
Cn033	**Speed Feed-forward smoothing filter** Smooth the speed feed-forward command.	40	Hz	1 | 100	Pe Pi	5-4-6
Cn034	**Torque command smoothing filter** Restrain sharp vibration noise by the setting and this filter delay the time of servo response.	0	Hz	0 | 1000	ALL	5-2-7
Cn035	**Panel display content selection** Select display content for LED panel for power on status. Setting: 0 — Display data set and drive status parameter. Refer 3-1 Setting: 1 | 19 — Display Un-01 ~ Un-19 content. Refer 3-2-1 for more information. Ex:Set Cn035=1, when power on it display the actual speed of motor. (content of Un-01)	0	X	0 | 19	ALL	3-1 3-2-1
Cn036	**Servo ID number** When using Modbus for communication, each servo units has to setting a ID number. When two or more drive ID overlap will lead to communication fail.	1	X	0 | 254	ALL	7
Cn037.0 	**Modbus RS-485 braud rate setting** 0: 4800 1: 9600 2: 19200 3: 38400 4: 57600 5: 115200	1	bps	0 | 5	ALL	7
Cn037.1 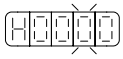	**PC Software RS-232 braud rate setting** 0: 4800 1: 9600 2: 19200 3: 38400	1	bps	0 | 3	ALL	7
Cn038	**Communication protocol** 0: 7 , N , 2 (Modbus , ASCII) 1: 7 , E , 1 (Modbus , ASCII) 2: 7 , O , 1 (Modbus , ASCII) 3: 8 , N , 2 (Modbus , ASCII) 4: 8 , E , 1 (Modbus , ASCII) 5: 8 , O , 1 (Modbus , ASCII) 6: 8 , N , 2 (Modbus , RTU) 7: 8 , E , 1 (Modbus , RTU) 8: 8 , O , 1 (Modbus , RTU)	0	X	0 | 8	ALL	7

Parameter	Name & Function	Default	Unit	Setting Range	Control Mode	Chapter
Cn039	**Communication time-out dection** Setting non-zero value to enable this function, communication Time should be in the setting period otherwise alarm message of communication time-out will show. Setting a zero value to disable this function.	0	sec	0 | 20	ALL	7
Cn040	**Communication response delay time** Delay Servo drive communication response time to master control unit.	0	0.5 msec	0 | 255	ALL	7

Torque-Control Parameter

Parameter	Name & Function	Default	Unit	Setting Range	Control Mode	Chapter
★Tn101	**Linear acceleration/deceleration method** Setting: 0 Disabled. 1 Enabled.	0	X	0 | 1	T	5-2-3
★Tn102	**Linear accel/decel time period.** Time taken for the torque-command to linearly accelerate to the rated torque level or Decelerate to zero torque . 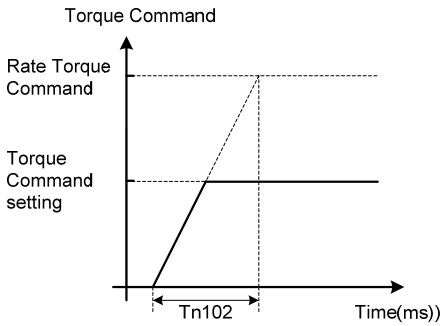	1	msec	1 | 50000	T	5-2-3
Tn103	**Analog Torque Command Ratio** Slope of voltage command / Torque command can be adjusted. 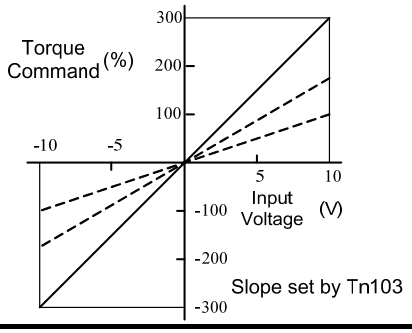	300	% 10V	0 | 300	T	5-2-1

Parameter	Name & Function	Default	Unit	Setting Range	Control Mode	Chapter
Tn104	**Torque Command, analog input voltage offset** The offset amount can be adjusted by this parameter. **Before Offset Adjustment** **After Offset Adjustment** 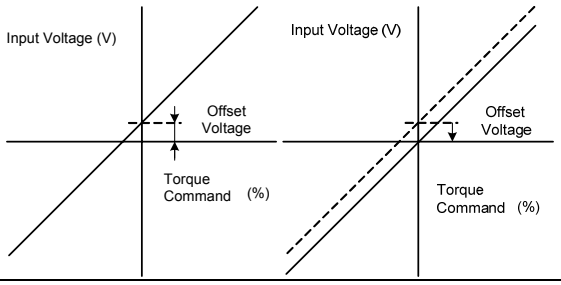	0	mV	-10000 | 10000	T	5-2-2
Tn105	**Preset Speed Limit 1. (Torque control mode)** In Torque control, input contacts SPD1 and SPD2 can be used to select Preset speed limit 1. As follows: **Input Contact SPD2** | **Input Contact SPD1** 0 | 1 Note: Input contacts status "1" (ON) and "0" (OFF). Refer to 5-6-1 to set high or low input logic levels.	100	rpm	0 | 3000	T	5-2-6
Tn106	**Preset Speed Limit 2. (Torque control mode)** In Torque control, input contacts SPD1 and SPD2 can be used to select Preset speed limit 2. As follows: **Input Contact SPD2** | **Input Contact SPD1** 1 | 0 Note: Input contacts status "1" (ON) and "0" (OFF) Refer to 5-6-1 to set high or low input logic levels.	200	rpm	0 | 3000	T	5-2-6
Tn107	**Preset Speed Limit 3. (Torque control mode)** In Torque control, input contacts SPD1 and SPD2 can be used to select Preset speed limit 3. As follows: **Input Contact SPD2** | **Input Contact SPD1** 1 | 1 Note: Input contacts status "1" (ON) and "0" (OFF) Refer to 5-6-1 to set high or low input logic levels.	300	rpm	0 | 3000	T	5-2-6
Tn108	**Torque output monitor value** When the torque level in CW or CCW direction become greater then this value setting, the output contact INT is active.	0	%	0 | 300	ALL	5-2-7

Speed-Control Parameter

<table>
<tr><th>Parameter</th><th>Name & Function</th><th>Default</th><th>Unit</th><th>Setting Range</th><th>Control Mode</th><th>Chapter</th></tr>
<tr><td>Sn201</td><td>Internal Speed Command 1
In Speed control, input contacts SPD1 and SPD2 can be used to select 3 sets of internal speed command, select for speed command 1 contact status shows below:
<table><tr><th>Input Contact SPD2</th><th>Input Contact SPD1</th></tr><tr><td>0</td><td>1</td></tr></table>Note: Input contacts status “1” (ON) and “0” (OFF) Refer to 5-6-1 to set high or low input logic levels.</td><td>100</td><td>rpm</td><td>-3000
|
3000</td><td>S</td><td>5-3-1</td></tr>
<tr><td>Sn202</td><td>Internal Speed Command 2
In Speed control, input contacts SPD1 and SPD2 can be used to select 3 sets of internal speed command, select for speed command 2 contact status shows below:
<table><tr><th>Input Contact SPD2</th><th>Input Contact SPD1</th></tr><tr><td>1</td><td>0</td></tr></table>Note: Input contacts status “1” (ON) and “0” (OFF) Refer to 5-6-1 to set high or low input logic levels.</td><td>200</td><td>rpm</td><td>-3000
|
3000</td><td>S</td><td>5-3-1</td></tr>
<tr><td>Sn203</td><td>Internal Speed Command 3
In Speed control, input contacts SPD1 and SPD2 can be used to select 3 sets of internal speed command, select for speed command 3 contact status shows below:
<table><tr><th>Input Contact SPD2</th><th>Input Contact SPD1</th></tr><tr><td>1</td><td>1</td></tr></table>Note: Input contacts status “1” (ON) and “0” (OFF). Refer to 5-6-1 to set high or low input logic levels.</td><td>300</td><td>rpm</td><td>-3000
|
3000</td><td>S</td><td>5-3-1</td></tr>
<tr><td>Sn204</td><td>Zero Speed selection Enable or Disable the zero speed preset parameter Sn215.
<table><tr><th>Setting</th><th>Explanation</th></tr><tr><td>0</td><td>No Action. (Sn215 zero preset is not effective).</td></tr><tr><td>1</td><td>Set the preset value in Sn215 as zero speed.</td></tr></table></td><td>0</td><td>X</td><td>0
|
1</td><td>S</td><td>5-3-12</td></tr>
<tr><td>Sn205</td><td>Speed command accel/decel smooth method.
<table><tr><th>Setting</th><th>Explanation</th></tr><tr><td>0</td><td>Disable this function.</td></tr><tr><td>1</td><td>Smooth Acceleration/deceleration according to the curve defined by Sn206.</td></tr><tr><td>2</td><td>Linear accel/decel time constant .Defined by Sn207</td></tr><tr><td>3</td><td>S curve for Acceleration/deceleration. Defined by Sn208.</td></tr></table></td><td>0</td><td>X</td><td>0
|
3</td><td>S</td><td>5-3-6</td></tr>
</table>

Parameter	Name & Function	Default	Unit	Setting Range	Control Mode	Chapter
Sn206	**Speed command smooth accel/decel time Constant.** Set **Sn205=1** to enable this function then set the time period for the speed to rise to 63.2% of the full speed. 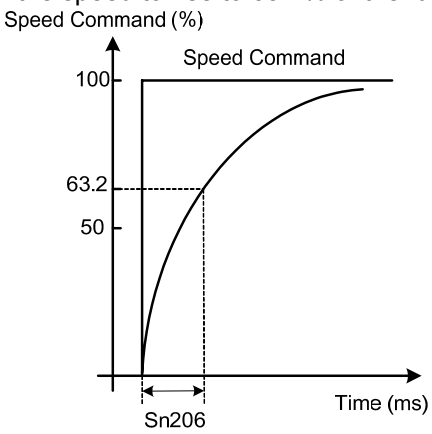	1	msec	1 | 10000	S	5-3-6
Sn207	**Speed command linear accel/decel time constant.** Set **Sn205**=2 to enable this function then set the time period for the speed to rise linearly to full speed. 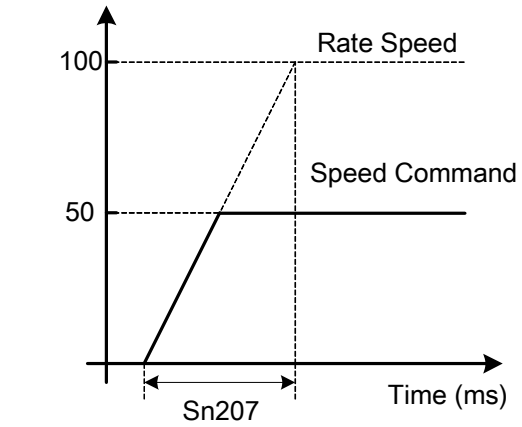	1	msec	1 | 50000	S	5-3-6

Parameter	Name & Function	Default	Unit	Setting Range	Control Mode	Chapter
Sn208	**S curve speed command acceleration and deceleration time setting.** Set **Sn205=3 to enable this function.** In the period of Accel. and Decel. , drastic speed changing might cause vibration of machine. S curve speed command Accel. and Decel. time setting has the effect to smooth Accel. and Decel. curve. 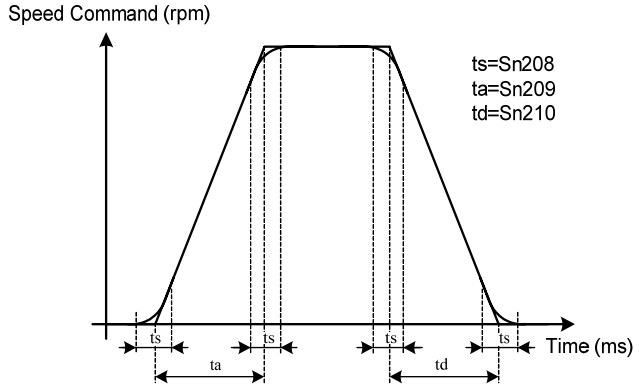 **Rule for the setting :** $\frac{t_a}{2} > t_s$, $\frac{t_d}{2} > t_s$	1	msec	1 | 1000	S	5-3-6
Sn209	**S curve speed command acceleration time setting.** Refer **Sn208**	200	msec	0 | 5000	S	5-3-6
Sn210	**S curve speed command deceleration time setting.** Refer **Sn208**	200	msec	0 | 5000	S	5-3-6
Sn211	**Speed loop Gain 1** Speed loop gain has a direct effect on the frequency response bandwidth of the Speed-control loop. Without causing vibration or noise Speed-loop-gain can be increased to obtain a faster speed response. If **Cn025 (load Inertia ratio)** is set correctly, the speed-loop-bandwidth will equal to speed-loop-gain.	40	Hz	10 | 450	Pi Pe S	5-3-8 5-5
Sn212	**Speed-loop Integral time 1** Speed loop integral element can eliminate the steady speed error and quick response for speed variations. Decreasing Integral time can improve system rigidity. The formula below shows the relationship between Integral time and Speed loop Gain. $SpeedLoopIntegrationTimeCons\tan t \geq 5 \times \frac{1}{2\pi \times SpeedLoopGain}$	100	x0.2 ms	1 | 500	Pi Pe S	5-3-8 5-5

Parameter	Name & Functions	Default	Unit	Setting Range	Control Mode	Chapter
Sn213	**Speed loop Gain 2** Refer to **Sn211**	40	Hz	10 | 450	Pi Pe S	5-3-8 5-5
Sn214	**Speed loop Integral time 2** Refer to **Sn212**	100	x0.2 msec	1 | 500	Pi Pe S	5-3-8 5-5
Sn215	**Value of zero speed** Set the zero speed range in Sn215 When the actual speed is lower than **Sn215** value, Output contact **ZS** is activated.	50	rpm	0 | 4500	S	5-3-12
Sn216	**Analog Speed Command Ratio** Slope of voltage command / Speed command can be adjusted. 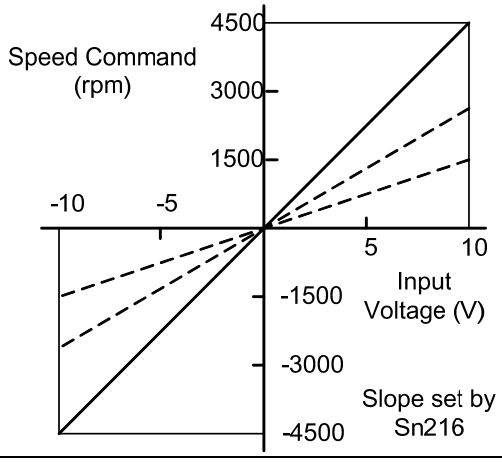	Rate rpm	rpm /10V	100 | 4500	S	5-3-2
Sn217	**Analog Speed Command offset adjust** The offset amount can be adjusted by this parameter. 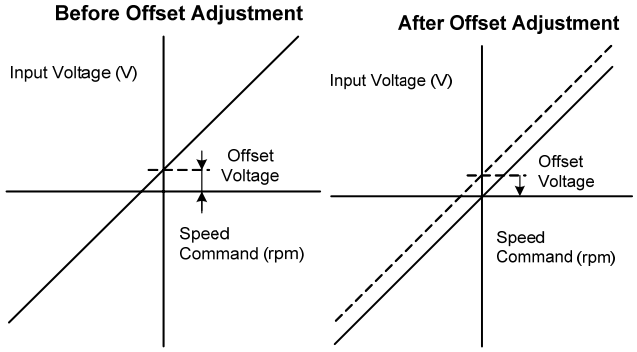	0	mV	-10000 | 10000	S	5-3-3
Sn218	**Analog speed command upper limited** Setting Sn218 for limit the highest speed command of analog input.	Rate rpm x 1.02	rpm	100 | 4500	S	5-3-4

Position Control Parameter

Parameter	Name & Function	Default	Unit	Setting Range	Control Mode	Chapter
★Pn301.0	**Position pulse command selection** Setting | Explanation 0 | (Pulse)+(Sign) 1 | (CCW)/(CW) Pulse 2 | AB-Phase pulse x 2 3 | AB-Phase pulse x 4	0	X	0 | 3	Pe	5-4-1
★Pn301.1	**Position- Pulse Command Logic** Setting | Explanation 0 | Positive Logic 1 | Negative Logic	0	X	0 | 1		
★Pn301.2 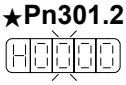	**Selection for command receive of drive inhibit mode** Setting | Explanation 0 | When drive inhibit occurs, record value of position command input coherently. 1 | When drive inhibit occurs, ignore the value of position command.	0	X	0 | 1	Pi Pe	5-4-1
Pn302	**Electronic Gear Ratio Numerator 1** Use input contacts GN1 & GN2 to select one of four electronic Gear Ratio Numerators. To select Numerator 1, the statue of the input-contacts GN1 & GN2 should be as follows: Input Contact GN2 | Input Contact GN1 0 | 0 Note: Input contacts status "1" (ON) and "0" (OFF). Refer to 5-6-1 to set high or low input logic levels.	1	X	1 | 50000	Pi Pe	5-4-3
Pn303	**Electronic Gear Ratio Numerator 2** Use input contacts GN1 & GN2 to select one of four electronic Gear Ratio Numerators. To select Numerator 2, the statue of the input-contacts GN1 & GN2 should be as follows: Input Contact GN2 | Input Contact GN1 0 | 1 Note: Input contacts status "1" (ON) and "0" (OFF). Refer to 5-6-1 to set high or low input logic levels.	1	X	1 | 50000	Pi Pe	5-4-3
Pn304	**Electronic Gear Ratio Numerator 3** Use input contacts GN1 & GN2 to select one of four electronic Gear Ratio Numerators. To select Numerator 3, the statue of the input-contacts GN1 & GN2 should be as follows: Input Contact GN2 | Input Contact GN1 1 | 0 Note: Input contacts status "1" (ON) and "0" (OFF). Refer to 5-6-1 to set high or low input logic levels.	1	X	1 | 50000	Pi Pe	5-4-3
Pn305	**Electronic Gear Ratio Numerator 4** Use input contacts GN1 & GN2 to select one of four electronic Gear Ratio Numerators. To select Numerator 4, the statue of the input-contacts GN1 & GN2 should be as follows: Input Contact GN2 | Input Contact GN1 1 | 1 Note: Input contacts status "1" (ON) and "0" (OFF). Refer to 5-6-1 to set high or low input logic levels.	1	X	1 | 50000	Pi Pe	5-4-3
Parameter	**Name & Function**	**Default**	**Unit**	**Setting Range**	**Control Mode**	**Chapter**

★**Pn306**	**Electronic Gear Ratio Denominator** Set the calculated Electronic Gear Ratio Denominator in Pn 306. (Refer to section 5-4-3). Electronic Gear Ratio should comply with the formula below. $\frac{1}{200} \le ElectronicGearRatio \le 200$	1	X	1 | 50000	Pi Pe	5-4-3
Pn307	**Position complete value** Set a value for In position output signal. When the Position pulse error value is less then **Pn307** output-contact **INP (In position output signal)** will be activated.	10	pulse	0 | 50000	Pi Pe	5-4-9
Pn308	**"Incorrect position" Error band Upper limit.** When the Position error value is higher then number of pulses set in **Pn308**, an Alarm message **AL-11**(Position error value alarm) will be displayed.	50000	pulse	0 | 50000	Pi Pe	5-4-9
Pn309	**"Incorrect position" Error band lower limit.** When the Position error value is lower then number of pulses set in **Pn309**, an Alarm message **AL-11**(Position error value alarm) will be displayed.	50000	pulse	0 | 50000	Pi Pe	5-4-9
Pn310	**Position Loop Gain 1** Without causing vibration or noise on the mechanical system the position loop gain value can be increased to increase system response and shorten the positioning time. Generally, the position loop bandwidth should not be higher then speed loop bandwidth. The relationship is according to the formula below: $PositionLoopGain \le 2\pi \times \frac{SpeedLoopGain}{5}$	40	1/s	1 | 450	Pi Pe	5-4-6 5-5
Pn311	**Position Loop Gain 2** Refer to **Pn310**	40	1/s	1 | 450	Pi Pe	5-4-6 5-5
Pn312	**Position Loop Feed Forward Gain** It can be used to reduce the track error of position control and speed up the response. If the feed forward gain is too large, it might cause speed overshoot and **INP** contact repeatedly switch ON/OFF. **INP**("In Position" output signal).	0	%	0 | 100	Pi Pe	5-4-6 5-5
★**Pn313**	**Position command smooth Acceleration/Deceleration Time Constant** Set the time period for the Position command pulse frequency to rise from 0 to 63.2%. 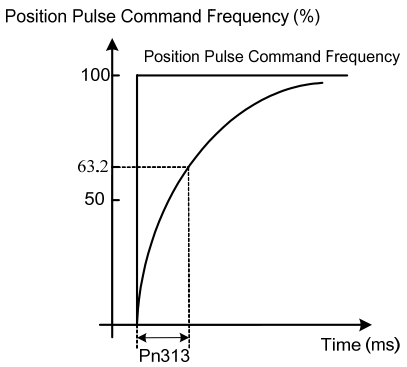	0	msec	0 | 10000	Pi Pe	5-4-4

Parameter	Name & Function	Default	Unit	Setting Range	Control Mode	Chapter
★Pn314	**Positioning Command Direction Definition** 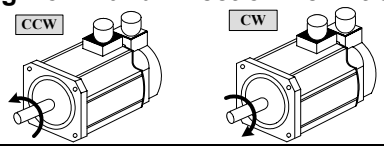 Setting: 0 = (CW) .Clockwise; 1 = (CCW). Counter Clockwise	1	X	0 | 1	★Pi Pe	5-4-5
Pn315	**Pulse Error Clear Modes.** Setting 0: Once **CLR** signal is activated, it eliminates, the Pulse error amount. Setting 1: Once CLR signal is activated, following takes place: The position command is cancelled. Motor rotation is interrupted Pulse error amount is cleared. Machine home reference is reset Setting 2: Once CLR signal is activated, following takes place:- The position command is cancelled.. Motor rotation is interrupted Pulse error amount is cleared.	0	X	0 | 2	Pe Pi Pe Pi	5-4-7
★Pn316.0	**Internal Position Command Mode** Setting 0: Absolute Position Setting 1: Incremental Position	0	X	0 | 1	Pi	5-4-2
★Pn316.1 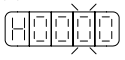	**Internal Position Command Hold (PHOLD) program select** Setting 0: When PHOLD is active then received PTRG signal. servomotor will be proceed internal position command from PHOLD position. Setting 1: When PHOLD is active then received PTRG signal. Servomotor will operate internal position command of current selection.	0	X	0 | 1	Pi	5-4-2
Pn317	**Internal Position Command 1 – Rotation Number** Set the Rotation number of the internal Position Command 1 Use input contacts POS1~POS4 to select Refer to 5-4-2.	0	rev	-30000 | 30000	Pi	5-4-2
Pn318	**Internal Position Command 1 - Pulse Number** Set the rotation pulse number of internal position Command 1 **Internal Position Command 1 =Pn317(Rotation Number) x Pulse number of One Rotate x 4 + Pn318(Pulse number)**	0	pulse	-32767 | 32767	Pi	5-4-2
Pn319	**Internal Position Command 1 - Move Speed** Setting the Move Speed of internal Position Command 1	0	rpm	0 | 3000	Pi	5-4-2
Pn320	**Internal Position Command 2-Rotation Number** Please refer to **Pn317**	0	rev	-30000 | 30000	Pi	5-4-2
Pn321	**Internal Position Command 2-Pulse Number** Please refer to **Pn318**	0	pulse	-32767 | 32767	Pi	5-4-2

Parameter	Name & Function	Default	Unit	Setting Range	Control Mode	Chapter
Pn322	**Internal Position Command 2-Move Speed** Please refer to **Pn319**	0	rpm	0 ~ 3000	Pi	5-4-2
Pn323	**Internal Position Command 3-Rotation Number** Please refer to **Pn317**	0	rev	-30000 ~ 30000	Pi	5-4-2
Pn324	**Internal Position Command 3-Pulse Number** Please refer to **Pn318**	0	pulse	-32767 ~ 32767	Pi	5-4-2
Pn325	**Internal Position Command 3-Move Speed** Please refer to **Pn319**	0	rpm	0 ~ 3000	Pi	5-4-2
Pn326	**Internal Position Command 4 -Rotation Number** Please refer to **Pn317**	0	rev	-30000 ~ 30000	Pi	5-4-2
Pn327	**Internal Position Command 4-Pulse Number** Please refer to **Pn318**	0	pulse	-32767 ~ 32767	Pi	5-4-2
Pn328	**Internal Position Command 4-Move Speed** Please refer to **Pn319**	0	rpm	0 ~ 3000	Pi	5-4-2
Pn329	**Internal Position Command 5 -Rotation Number** Please refer to **Pn317**	0	rev	-30000 ~ 30000	Pi	5-4-2
Pn330	**Internal Position Command 5-Pulse Number** Please refer to **Pn318**	0	pulse	-32767 ~ 32767	Pi	5-4-2
Pn331	**Internal Position Command 5-Move Speed** Please refer to **Pn319**	0	rpm	0 ~ 3000	Pi	5-4-2
Pn332	**Internal Position Command 6 -Rotation Number** Please refer to **Pn317**	0	rev	-30000 ~ 30000	Pi	5-4-2
Pn333	**Internal Position Command 6-Pulse Number** Please refer to **Pn318**	0	pulse	-32767 ~ 32767	Pi	5-4-2
Pn334	**Internal Position Command 6-Move Speed** Please refer to **Pn319**	0	rpm	0 ~ 3000	Pi	5-4-2
Pn335	**Internal Position Command 7 -Rotation Number** Please refer to **Pn317**	0	rev	-30000 ~ 30000	Pi	5-4-2
Pn336	**Internal Position Command 7-Pulse Number** Please refer to **Pn318**	0	pulse	-32767 ~ 32767	Pi	5-4-2
Pn337	**Internal Position Command 7-Move Speed** Please refer to **Pn319**	0	rpm	0 ~ 3000	Pi	5-4-2
Pn338	**Internal Position Command 8 -Rotation Number** Please refer to **Pn317**	0	rev	-30000 ~ 30000	Pi	5-4-2
Pn339	**Internal Position Command 8-Pulse Number** Please refer to **Pn318**	0	pulse	-32767 ~ 32767	Pi	5-4-2
Pn340	**Internal Position Command 8-Move Speed** Please refer to **Pn319**	0	rpm	0 ~ 3000	Pi	5-4-2

Parameter	Name & Function	Default	Unit	Setting Range	Control Mode	Chapter
Pn341	**Internal Position Command 9 -Rotation Number** Please refer to **Pn317**	0	rev	-30000 | 30000	Pi	5-4-2
Pn342	**Internal Position Command 9-Pulse Number** Please refer to **Pn318**	0	pulse	-32767 | 32767	Pi	5-4-2
Pn343	**Internal Position Command 9-Move Speed** Please refer to **Pn319**	0	rpm	0 | 3000	Pi	5-4-2
Pn344	**Internal Position Command 10 -Rotation Number** Please refer to **Pn317**	0	rev	-30000 | 30000	Pi	5-4-2
Pn345	**Internal Position Command 10-Pulse Number** Please refer to **Pn318**	0	pulse	-32767 | 32767	Pi	5-4-2
Pn346	**Internal Position Command 10-Move Speed** Please refer to **Pn319**	0	rpm	0 | 3000	Pi	5-4-2
Pn347	**Internal Position Command 11 -Rotation Number** Please refer to **Pn317**	0	rev	-30000 | 30000	Pi	5-4-2
Pn348	**Internal Position Command 11-Pulse Number** Please refer to **Pn318**	0	pulse	-32767 | 32767	Pi	5-4-2
Pn349	**Internal Position Command 11-Move Speed** Please refer to **Pn319**	0	rpm	0 | 3000	Pi	5-4-2
Pn350	**Internal Position Command 12-Rotation Number** Please refer to **Pn317**	0	rev	-30000 | 30000	Pi	5-4-2
Pn351	**Internal Position Command 12-Pulse Number** Please refer to **Pn318**	0	pulse	-32767 | 32767	Pi	5-4-2
Pn352	**Internal Position Command 12-Move Speed** Please refer to **Pn319**	0	rpm	0 | 3000	Pi	5-4-2
Pn353	**Internal Position Command 13 -Rotation Number** Please refer to **Pn317**	0	rev	-30000 | 30000	Pi	5-4-2
Pn354	**Internal Position Command 13-Pulse Number** Please refer to **Pn318**	0	pulse	-32767 | 32767	Pi	5-4-2
Pn355	**Internal Position Command 13-Move Speed** Please refer to **Pn319**	0	rpm	0 | 3000	Pi	5-4-2
Pn356	**Internal Position Command 14 -Rotation Number** Please refer to **Pn317**	0	rev	-30000 | 30000	Pi	5-4-2
Pn357	**Internal Position Command 14-Pulse Number** Please refer to **Pn318**	0	pulse	-32767 | 32767	Pi	5-4-2
Pn358	**Internal Position Command 14-Move Speed** Please refer to **Pn319**	0	rpm	0 | 3000	Pi	5-4-2
Pn359	**Internal Position Command 15 -Rotation Number** Please refer to **Pn317**	0	rev	-30000 | 30000	Pi	5-4-2

Parameter	Name & Function	Default	Unit	Setting Range	Control Mode	Chapter
Pn360	**Internal Position Command 15-Pulse Number** Please refer to **Pn318**	0	pulse	-32767 ~ 32767	Pi	5-4-2
Pn361	**Internal Position Command 15-Move Speed** Please refer to **Pn319**	0	rpm	0 ~ 3000	Pi	5-4-2
Pn362	**Internal Position Command 16 -Rotation Number** Please refer to **Pn317**	0	rev	-30000 ~ 30000	Pi	5-4-2
Pn363	**Internal Position Command 16-Pulse Number** Please refer to **Pn318**	0	pulse	-32767 ~ 32767	Pi	5-4-2
Pn364	**Internal Position Command 16-Move Speed** Please refer to **Pn319**	0	rpm	0 ~ 3000	Pi	5-4-2
Pn365.0 H0000	**Setting for HOME routine.** Setting: Explanation 0: Once the home routine is activated, motor will search for Home Position switch in 1st speed in **CCW direction.** Input contacts **CCWL** or **CWL can be used as** the Home Reference Switch. Once Home reference switch is detected, then input Contacts **CCWL** and **CWL** will act as normal Max limits again. **Note:** When using this function, **Pn365.1** can not be set to **1** or **2**. **Cn002.1 (selection for CCWL and CWL) must be set to 0.** 1: Once the home routine is activated, motor will search for Home position switch in 1st speed in **CW direction.** Input contacts **CCWL** or **CWL can be used as** the Home Reference Switch. Once Home position is detected, then input contacts **CCWL** and **CWL** will act as normal max. limits again. **Note:** When using this function, **Pn365.1** can not be set to **1** or **2**. **Cn002.1 (selection for CCWL and CWL) must be set to 0.** 2: Once the home routine is activated , motor will search for Home position switch in 1st speed in **CCW direction** and sets the Home reference position as soon as the input contact **ORG is activated.** If **Pn365.1=2**, it will directly find the closest Rising-Edge of **ORG** to be the Home position (without a need for Home Reference), then it stops in accordance with **Pn365.3** setting.	0	X	0 ~ 5	Pi Pe	5-4-8

Parameter	Name & Functions		Default	Unit	Setting Range	Control Mode	Chapter
Pn365.0	3	Once the home routine is activated , motor will search for Home position switch in 1st speed in **CW direction** and sets the reference Home position as soon as the input contact **ORG is activated.** If **Pn365.1=2**, it will directly find the closest rising -Edge of **ORG** to be the Home position (without a need for Home reference), then it stops in accordance with **Pn365.3** setting.	0	X	0 | 5	Pi Pe	5-4-8
	4	Once the home routine is activated , motor will search for Home position in 1st speed in **CCW direction** and sets the Home reference position as soon as the nearest Z (marker pulse) is detected. When using this function, set **Pn365.1=2** . After setting the **Z** Phase to be the Home, it stops in accordance with the setting of **Pn365.3.**					
	5	Once the home routine is activated , motor will search for Home position in 1st speed in **CW direction** and sets the Home reference position as soon as the nearest Z (marker pulse) is detected. When using this function, set **Pn365.1=2** . After setting the **Z** Phase to be the Home, it stops in accordance with the setting of **Pn365.3.**					
Pn365.1 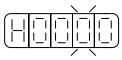	**Once Reference Home switch or Signal, is found it sets the search method for the Home position.**		0	X	0 | 2	Pi Pe	5-4-8
	Setting	**Explanation**					
	0	Once the Home Reference switch or signal is detected, motor **reverses direction** in 2nd speed to find the nearest **Z.** Phase pulse and sets this as the Home position, then stops in accordance with **Pn365.3** setting method.					
	1	Once the Home Reference switch or signal is detected, motor **Continues in its direction** in 2nd speed to find the nearest **Z** Phase pulse and sets this as the Home position, then stops in accordance with **Pn365.3** setting method.					
	2	When **Pn365.0=2** or **3**, it finds the rising edge of ORG to be the Home position, then stops in accordance with **Pn365.3.** When **Pn365.0=4** or **5**, it finds **Z** Phase pulse to be the Home, then stops in accordance with **Pn365.3**.					
Pn365.2 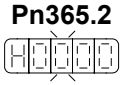	**Setting of Home Routine Start method**		0	X	0 | 2		
	Setting	Explanation					
	0	Homing routine is **Disabled.**					
	1	On power up and activation of **Servo on** the home routine is started automatically. This method is useful for applications that do not require repeated home routines. No external home reference switch is required.					
	2	Use **SHOME** input contact to start a home routine. In position mode, **SHOME** can be used to start a home routine at any moment.					

Parameter	Name & Function	Default	Unit	Setting Range	Control Mode	Chapter
Pn365.3 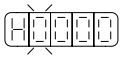	**Setting of stopping mode after finding Home signal.** Setting: 0 — After detecting the Home signal, it **sets** this position to be the Home reference (**Un-14** encoder feed back rotating number and **Un-15** encoder feed back pulse number are all 0), motor decelerates and stops. Then it reverses direction in 2nd speed to detect the Home Position again then it decelerates and stops.. Setting: 1 — After detecting the Home signal, it **sets** this position to be the Home reference (**Un-14** encoder feed back rotating number and **Un-15** encoder feed back pulse number are all 0), motor decelerates and stops.	0	X	0 | 1	Pi Pe	5-4-8
Pn366	**Machine Home reference search speed. 1st speed (Fast)** HOME **Refeence** search speed . Speed 1.	100	rpm	0 | 2000	Pi Pe	5-4-8
Pn367	**Machine Home position search speed. 2nd Speed (Slow)** Home **position** search speed . Speed 2.	50	rpm	0 | 500	Pi Pe	5-4-8
Pn368	**Home position offset . Number of revolutions.** Once the searched home position is found in accordance with Pn365 (Home routine mode), then it will search by a number of revolutions and pulses set in parameters Pn368 and Pn 369 to find the new (off set) Home position.	0	rev	-30000 | 30000	Pi Pe	5-4-8
Pn369	**Home position offset . Number of Pulses.** Home Offset position = Pn368(Rotate Number) x Number of Encoder Pulse per Rotation x 4 + Pn369(Pulse Number)	0	pulse	-32767 | 32767	Pi Pe	5-4-8

Quick Set-up Parameters

Parameter	Name & Function	Default	Unit	Setting Range	Control Mode	Chapter
◆qn401	**Speed Loop Gain 1. (Same function as Sn211)** Speed loop gain has a direct effect on the frequency response bandwidth of the Speed-control loop. Without causing vibration or noise Speed-loop-gain can be increased to obtain a faster speed response. If **Cn025 (load Inertia ratio)** is correctly set, the speed-loop-bandwidth will equal to speed-loop-gain.	40	Hz	10 | 450	Pi Pe S	5-3-8 5-5
◆qn402	**Speed-loop Integral time 1. (Same function as Sn212)** Speed loop integral element can eliminate the steady speed error and react to even slight speed variations. Decreasing Integral time can improve system rigidity. The formula below shows the relationship between Integral time and Speed loop Gain. $SpeedLoopIntegrationTimeCons\tan t \geq 5\times\frac{1}{2\pi\times SpeedLoopGain}$	100	x0.2 ms	1 | 500	Pi Pe S	5-3-8 5-5
◆qn403	**Speed Loop Gain 2. (Same function as Sn213)** Refer to **qn401**	40	Hz	10 | 450	Pi Pe S	5-3-8 5-5
◆qn404	**Speed Loop Integration Time Constant 2. (Same function as Sn214)** Refer to **qn402**	100	x0.2 ms	1 | 500	Pi Pe S	5-3-8 5-5
◆qn405	**Position Loop Gain 1. (Same function as Pn310)** Without causing vibration or noise on the mechanical system the position loop gain value can be increased to speed up response and shorten the positioning time. Generally, the position loop bandwidth should not be higher then speed loop bandwidth. The relationship is according to the formula below: $PositionLoopGain \leq 2\pi\times\frac{SpeedLoopGain}{5}$	40	1/s	1 | 450	Pi Pe	5-4-6 5-5
◆qn406	**Position Loop Gain 2 (Same function as Pn311)** Please refer to **qn405**	40	1/s	1 | 450	Pi Pe	5-4-6 5-5
◆qn407	**Position Loop Feed Forward Gain** It can be used to reduce the follow up error of position control and speed up the response. If the feed forward gain is too large, it might cause speed Overshoot and in position oscillations which result in the repeated ON/OFF operation of the output contact **INP**(“In Position” output signal).	0	%	0 | 100	Pi Pe	5-4-6 5-5

Multi-Function Input Parameters

Parameter	Name & Function			Default	Unit	Setting Range	Control Mode	Chapter
★Hn501.0 ★Hn501.1 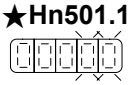	**DI-1 Programmable Digital input Selection**			01	X	01 | 1C (HEX)	ALL	5-6-1
	Seting	Explanation						
		Signal	Functions					
	01	**SON**	Servo On					
	02	**ALRS**	Alarm Reset					
	03	**PCNT**	PI/P Switching					
	04	**CCWL**	CCW Limit					
	05	**CWL**	CW Limit					
	06	**TLMT**	External Torque Limit					
	07	**CLR**	Clear Pulse Error Value					
	08	**LOK**	Servo Lock					
	09	**EMC**	Emergency Stop					
	0A	**SPD1**	Speed 1					
	0B	**SPD2**	Speed 2					
	0C	**MDC**	Control Mode Switch					
	0D	**INH**	Position Command Inhibit					
	0E	**SPDINV**	Speed Inverse					
	0F	**G-SEL**	Gain Select					
	10	**GN1**	Electronic Gear Ratio Numerator 1					
	11	**GN2**	Electronic Gear Ratio Numerator 2					
	12	**PTRG**	Position Trigger					
	13	**PHOLD**	Position Hold					
	14	**SHOME**	Start Home					
	15	**ORG**	Home Position Reference (Origin)					
	16	**POS1**	Internal Position select 1					
	17	**POS2**	Internal Position select 2					
	18	**POS3**	Internal Position select 3					
	19	**POS4**	Internal Position select 4					
	1A	**TRQINV**	Torque Inverse					
	1B	**RS1**	Torque CW Selecting					
	1C	**RS2**	Torque CCW Selecting					
★Hn501.2 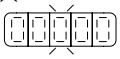	**DI-1 Logic State. NO/NC Selection**			0	X	0 | 1		
	Setting	Explanation						
	0	Input contact state. NO (Normally Open). Connecting (IG24) to inputs, enables the selected function.						
	1	Input contact state. NC (Normally Closed). Disconnecting (IG24) from inputs, enables the selected function.						

★New setting will become effective after re-cycling the power.

Warning! If any of programmable Inputs of DI-1 ~ DI-6 are set for the same type of function then the logic state selection (NO or NC selection) for these inputs must be the same type. Otherwise an Alarm will be displayed. AL-07 (Abnormal DI/DO programming).

Parameter	Name & Function	Default	Unit	Setting Range	Control Mode	Chapter
★Hn502	**DI-2 Programmable Digital input Selection** Please refer to **Hn501**	002	X	001 | 11C	ALL	5-6-1
★Hn503	**DI-3 Programmable Digital input Selection** Please refer to **Hn501**	003	X	001 | 11C	ALL	5-6-1
★Hn504	**DI-4 Programmable Digital input Selection** Please refer to **Hn501**	008	X	001 | 11C	ALL	5-6-1
★Hn505	**DI-5 Programmable Digital input Selection** Please refer to **Hn501**	00A	X	001 | 11C	ALL	5-6-1
★Hn506	**DI-6 Programmable Digital input Selection** Please refer to **Hn501**	006	X	001 | 11C	ALL	5-6-1
★Hn507.0 ★Hn507.1 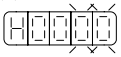	**DO-1 Programmable Digital Output Selection** Setting: Explanation Signal: Functions 01 **RDY** Servo Ready 02 **ALM** Alarm 03 **ZS** Zero Speed 04 **BI** Brake Signal 05 **INS** In Speed 06 **INP** In Position 07 **HOME** HOME 08 **INT** In Torque	007 01	X	001 | 11C 01 | 08	ALL	5-6-1
★Hn507.2 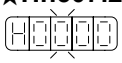	**DO-1 Digital Output Logic State.** Setting: Explanation 0 Close, when the output is activated. 1 Open, when the output is activated.	0	X	0 | 1	ALL	5-6-1
★Hn508	**DO-2 Programmable Digital Output Selection** Please refer to **Hn507**	002	X	001 | 108	ALL	5-6-1
★Hn509	**DO-3 Programmable Digital Output Selection** Please refer to **Hn507**	003	X	001 | 108	ALL	5-6-1

★New setting will become effective after re-cycling the power.

Warning! If any of programmable Inputs of DO-1 ~ DO-3 are set for the same type of function then the logic state selection (NO or NC selection) for these inputs must be the same type. Otherwise an Alarm will be displayed. AL-07 (Abnormal DI/DO programming).

Parameter	Name & Function	Default	Unit	Setting Range	Control Mode	Chapter
★Hn510	**Digital input control method selection.** Select digital input (6 pins) control method by external terminal or communication. Convert Binary code to Hex code for setting this parameter. DI and binary bits table as below. Binary code representation： →" 0 " Digital input control by external terminal. →" 1 " Digital input control by communication. Set H0000 for Hn510 represent DI-1,DI-3, DI-6 are controlled by external terminal and set H0003F represent all terminal is controlled by communication. The corresponding binary code is :[10 0101] convert to Hex code is : [H 0025]for entering parameter. For the setting Bit0 (DI-1) is control by communication and Bit1 (DI-2) is control by external terminal ….etc	H0000	X	H0000 | H003F (HEX)	ALL	5-6-17
★Hn511	**Setting digital input status in communication mode** Change Hn511 Hex code for setting digital input status of communication control mode; Setting method refer Hn510. Binary code representation： "0" : digital input contact OFF "1" : digital input contact ON Set H0000 for Hn510 represent H0000 are controlled by external terminal and set H0003F represent all terminal is controlled by communication. **P.S.)This parameter should co-operate with Hn510.**	H0000	X	H0000 | H003F (HEX)	ALL	5-6-17

Chapter 7 Communications function

7-1 Communications function (RS-232 & RS-485)

The Servo drive provides RS232 communication. The description below shows the communication wiring and communication protocol.

7-1-1 Communication wiring

RS-232

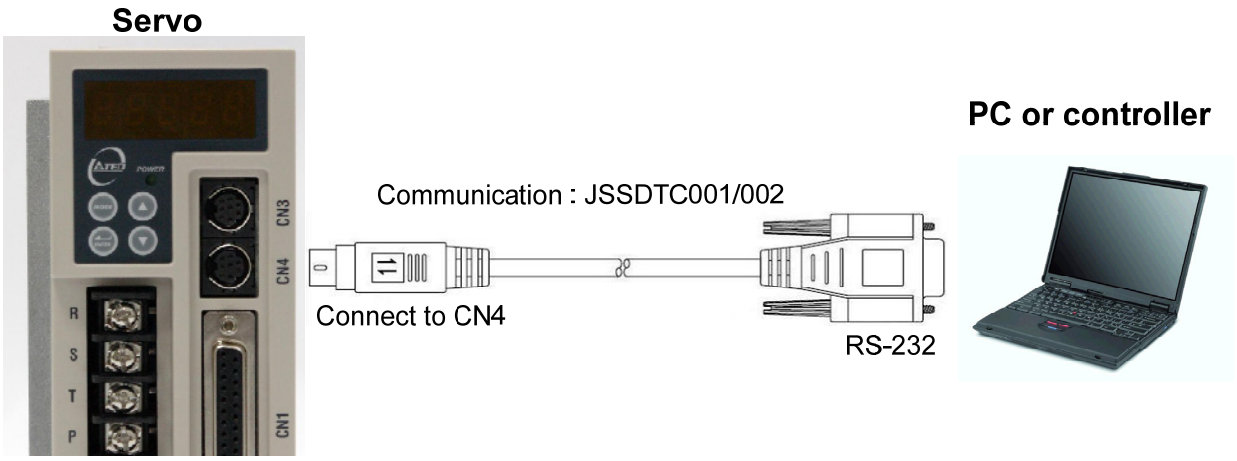

Driver terminal MD-Type 8Pins

Pin	Description	Name
1	Receive Data	RxD
2	————	——
3	Ground	GND
4	Transmit Data	TxD
5	Transmit Data +	Data +
6	————	——
7	Transmit Data -	Data -
8	————	——

PC terminal D-Type 9Pins(female)

Pin	Description	Name
1	Protective Ground	PG
2	Receive Data	RxD
3	Transmit Data	TxD
4	Data Terminal Ready	DTR
5	Ground	GND
6	Data Set Ready	DSR
7	Request to Send	RTS
8	Clear to Send	CTS
9	Ring indicator	RI

*** Pin 4 and Pin 6 is a close loop**

*** Pin 7 and Pin 8 is a close loop**

RS-485

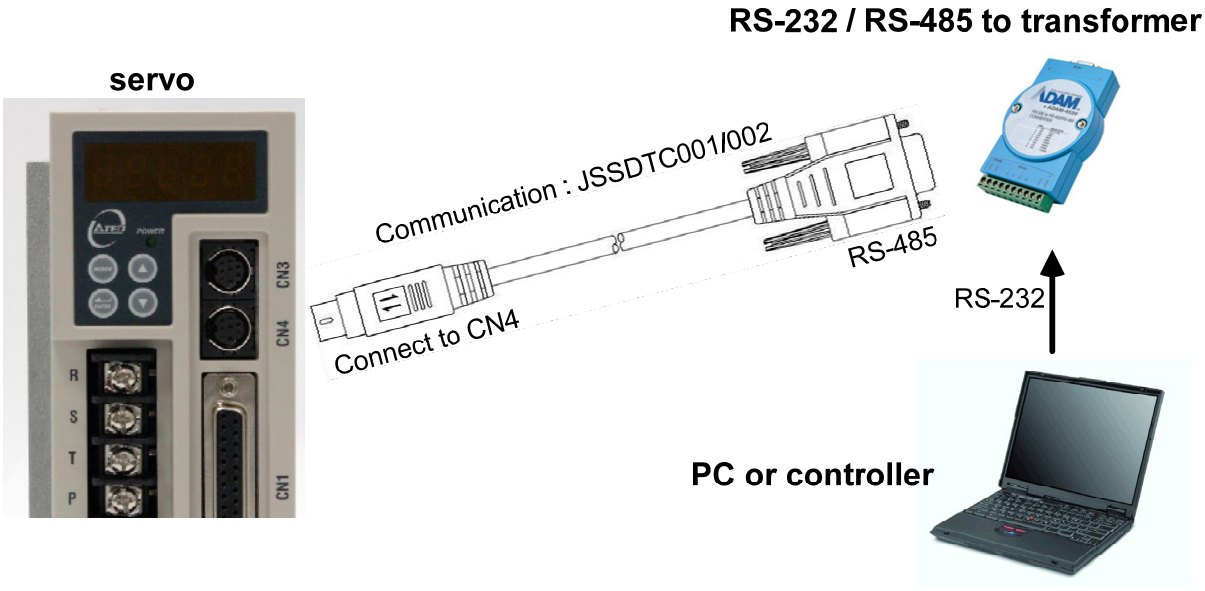

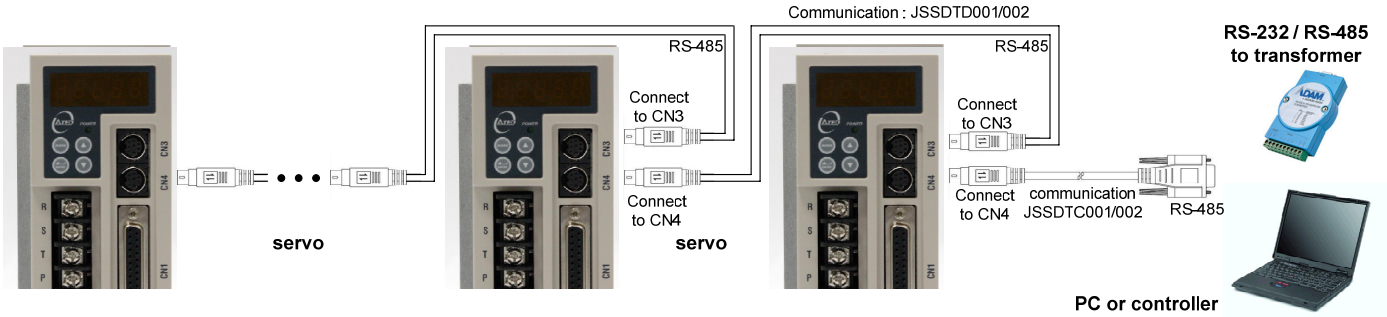

Driver terminal MD-Type 8Pins

Pin	Description	Name
1	Receive Data	RxD
2	————	——
3	Ground	GND
4	Transmit Data	TxD
5	Transmit Data +	Data +
6	————	——
7	Transmit Data -	Data -
8	————	——

RS-232 / RS-485 to converter

Description	Name
Transmit Data +	Data +
Transmit Data -	Data -
Power input +	+VS
Power input -	GND

Power supply

7-1-2 RS-232, RS-485 communication parameter

<table>
<tr><th>Parameter</th><th>Name & Function</th><th>Default</th><th>Unit</th><th>Setting Range</th><th>Control Mode</th><th>Chapter</th></tr>
<tr><td>Cn036</td><td>Servo ID number
When using Modbus for communication, each servo units has to setting a ID number. When two or more drive ID overlap will lead to communication fail.</td><td>1</td><td>X</td><td>0
|
254</td><td>ALL</td><td>7</td></tr>
<tr><td>Cn037.0
 </td><td>Modbus RS-485 braud rate setting<table><tr><td>Setting</td><td>Explanation</td></tr><tr><td>0</td><td>4800</td></tr><tr><td>1</td><td>9600</td></tr><tr><td>2</td><td>19200</td></tr><tr><td>3</td><td>38400</td></tr><tr><td>4</td><td>57600</td></tr><tr><td>5</td><td>115200</td></tr></table></td><td>1</td><td>bps</td><td>0
|
5</td><td>ALL</td><td>7</td></tr>
<tr><td>Cn037.1
 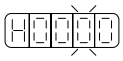 </td><td>PC Software RS-232 braud rate setting<table><tr><td>Setting</td><td>Explanation</td></tr><tr><td>0</td><td>4800</td></tr><tr><td>1</td><td>9600</td></tr><tr><td>2</td><td>19200</td></tr><tr><td>3</td><td>38400</td></tr></table></td><td>1</td><td>bps</td><td>0
|
3</td><td>ALL</td><td></td></tr>
<tr><td>Cn038</td><td>Communication protocol<table><tr><td>Setting</td><td>Explanation</td></tr><tr><td>0</td><td>7 , N , 2 (Modbus , ASCII)</td></tr><tr><td>1</td><td>7 , E , 1 (Modbus , ASCII)</td></tr><tr><td>2</td><td>7 , O , 1 (Modbus , ASCII)</td></tr><tr><td>3</td><td>8 , N , 2 (Modbus , ASCII)</td></tr><tr><td>4</td><td>8 , E , 1 (Modbus , ASCII)</td></tr><tr><td>5</td><td>8 , O , 1 (Modbus , ASCII)</td></tr><tr><td>6</td><td>8 , N , 2 (Modbus , RTU)</td></tr><tr><td>7</td><td>8 , E , 1 (Modbus , RTU)</td></tr><tr><td>8</td><td>8 , O , 1 (Modbus , RTU)</td></tr></table></td><td>0</td><td>X</td><td>0
|
8</td><td>ALL</td><td>7</td></tr>
<tr><td>Cn039</td><td>Communication time-out dection
Setting non-zero value to enable this function, communication Time should be in the setting period otherwise alarm message of communication time-out will show. Setting a zero value to disable this function.</td><td>0</td><td>sec</td><td>0
|
20</td><td>ALL</td><td>7</td></tr>
<tr><td>Cn040</td><td>Communication response delay time
Delay Servo drive communication response time to master control unit.</td><td>0</td><td>0.5
msec</td><td>0
|
255</td><td>ALL</td><td>7</td></tr>
<tr><th>Parameter</th><th>Name & Function</th><th>Default</th><th>Unit</th><th>Setting Range</th><th>Control Mode</th><th>Chapter</th></tr>
</table>

Hn510	**Digital input control method selection.** Select digital input (6 pins) control method by external terminal or communication. Convert Binary code to Hex code for setting this parameter. DI and binary bits table as below. Binary code representation: →" 0 " Digital input control by external terminal. →" 1 " Digital input control by communication. Set H0000 for Hn510 represent DI-1,DI-3, DI-6 are controlled by external terminal and set H0003F represent all terminal is controlled by communication. The corresponding binary code is :[10 0101] convert to Hex code is : [H 0025]for entering parameter. For the setting Bit0 (DI-1) is control by communication and Bit1 (DI-2) is control by external terminal ….etc	H0000	X	H0000 | H003F (HEX)	ALL	5-6-17
Hn511	**Setting digital input status in communication mode** Change Hn511 Hex code for setting digital input status of communication control mode; Setting method refer Hn510. Binary code representation: "0" : digital input contact OFF "1" : digital input contact ON Set H0000 for Hn510 represent H0000 are controlled by external terminal and set H0003F represent all terminal is controlled by communication. **P.S.)This parameter should co-operate with Hn510.**	H0000	X	H0000 | H003F (HEX)	ALL	5-6-17

7-1-3 RS-232 Communication protocol and format

Baud rate	9600bps (Selection by **Cn037.1**)
Parity	No
Data bit	8
Stop bit	1

※ Symbol H in folling sentence is for Hex representation.

(1) Read a word from servo drive ⏩ Function code format: **R5XxSs**

Xx : A request to read register " Xx " from slave device(Unit :Byte, Hex representation)

Ss : Check Sum Ss ='R'+'5'+'X'+'x' (Unit :Byte、Hex representation)

Ex1: Read register address 30H and

(Convert『R530』into ASCII codes)

Check Sum=52H+35H+33H+30H=EA H

→ R 5 3 0

Obtain Function code for read register address 30H:『R530EA』

Servo drive response : %XxYySs

Ss is Check Sum, Ss='%'+'X'+'x'+'Y'+'y'

Response message of example 1:

0008H is the data store in register address 30H:

Check Sum=25H+30H+30H+30H+38H=EDH

% 0 0 0 8

Drive response message:『%0008ED』

* When function code incorrect , drive response :『!』(ASCII code: 21H)

(2) Read consecutive 2 words from drive ⏩ Function code format: L5NnSs

Nn : A request to read register " Nn " from slave device (Unit :Byte, Hex representation)

Ss : Check Sum、Ss ='L'+'5'+'N'+'n' (Unit : Byte, Hex representation)

Ex2: Read data from register address 60H and

(Convert『L560』into ASCII codes)

Check Sum=4CH+35H+36H+30H=E7

L 5 6 0

Obtain Function code for read register address 60H:『L560E7』

Servo drive response: %XxYyAaBbSs

Ss is Check Sum，Ss='%'+'X'+'x'+'Y'+'y' +'A'+'a'+'B'+'b'

XxYy is the data store in register address Nn+1,

AaBb is the data store in register address Nn

Response message of example 2:

0001 000AH is the data store in register 60H

Check Sum=25H+30H+30H+30H+31H+30H+30H +30H+41H=1B7H

% 0 0 0 1 0 0 0 A

Drive response message:『%0001000AB7』

* When function code incorrect , drive response :『!』(ASCII code: 21H)

(3) Write a word to drive ⏩ Function code format: **W5XxYyZzSs**

Xx : Address for write data (Unit :Byte、Hex representation)

YyZz : Writes the data contents (Unit :word, Hex representation)

Ss : Check Sum，Ss ='W'+'5'+'X'+'x'+'Y'+'y'+'Z'+'z' (Unit :Byte, Hex representation)

Ex3：Write data 0008H to register 30H

(Convert『W5300008』into ASCII codes)

Check Sum=57H+35H+33H+30H+30H+30H+30H+38H=1B7H

W 5 3 0 0 0 0 8

Obtain Function code for write data 0008H to register 30H : **『W5300008B7』**

Drive response message :『%』(ASCII code :25H)

* When function code incorrect , drive response :『!』(ASCII code: 21H)

(4) Write consecutive 2 words to drive ⏩ Function code format: M5NnXxYyAaBbSs

Nn : Address for write data(Unit :Byte、Hex representation)

XxYy : Writes the data contents of address Nn+1 (Unit :Word、Hex representation)

AaBb : Writes the data contents of address Nn (Unit :Word、Hex representation)

Ss : Check Sum , Ss ='M'+'5'+'N'+'n'+'X'+'x'+'Y'+'y'+'A'+'a'+'B'+'b' (Unit :Byte、Hex representation)

Ex4: Write data 0002 000BH to register 60H

(Convert『M5600002000B』into ASCII codes)

Check Sum=4DH+35H+36H+30H+30H+30H+30H+32H+30H+30H+30H+42H =27CH

M 5 6 0 0 0 0 2 0 0 0 B

Obtain Function code for write data 0002000BH to register 60H：『M5600002000B7C』

Drive response message:『%』(ASCII code :25H)

* When function code incorrect , drive response :『!』(ASCII code: 21H)

7-1-4 Modbus communication protocol for RS-485

The MODBUS protocol allows an easy communication within types of network architectures,before start to communication with slave device, set the ID number (**Cn036**) for Servo drive respectively, server distinguish ID number for controlling specific client station.

Standard Modbus networks combine two transmission modes: ASCII or RTU: ASCII(American Standard Code for information interchange) Mode and RTU (Remote Terminal Unit) Mode, Use **Cn038 to** select ASCII or RTU mode.

Coding method

ASCII Mode

8-bits Data consist of two ASCII code.

Ex: Data 26H 1-byte , the ’26’ convert to ASCII code is include character ’2‘ → <32H> and ’6’ →<36H>

ASCII Chart (0 ~ 9 and A ~ F):

Character	‘0’	‘1’	‘2’	‘3’	‘4’	‘5’	‘6’	‘7’
ASCII code(Hex)	30H	31H	32H	33H	34H	35H	36H	37H
Character	‘8’	‘9’	‘A’	‘B’	‘C’	‘D’	‘E’	‘F’
ASCII code(Hex)	38H	39H	41H	42H	43H	44H	45H	46H

RTU Mode

Each 8bits is consist of 2 Hex number (4-bits per Hex number).

Ex.: Data 26H, the data length is 1-byte.

ASCII Mode Framing

10 bits Frame (7-bits Data)

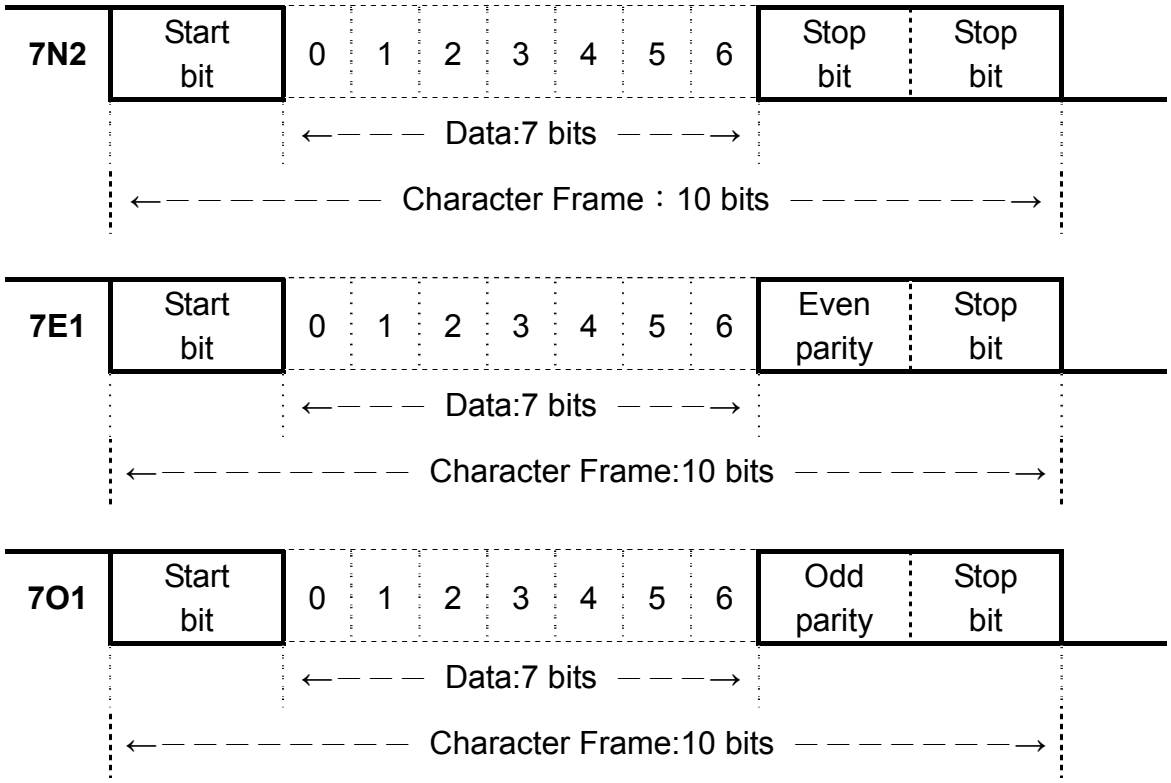

11 bits Frame (8-bits Data)

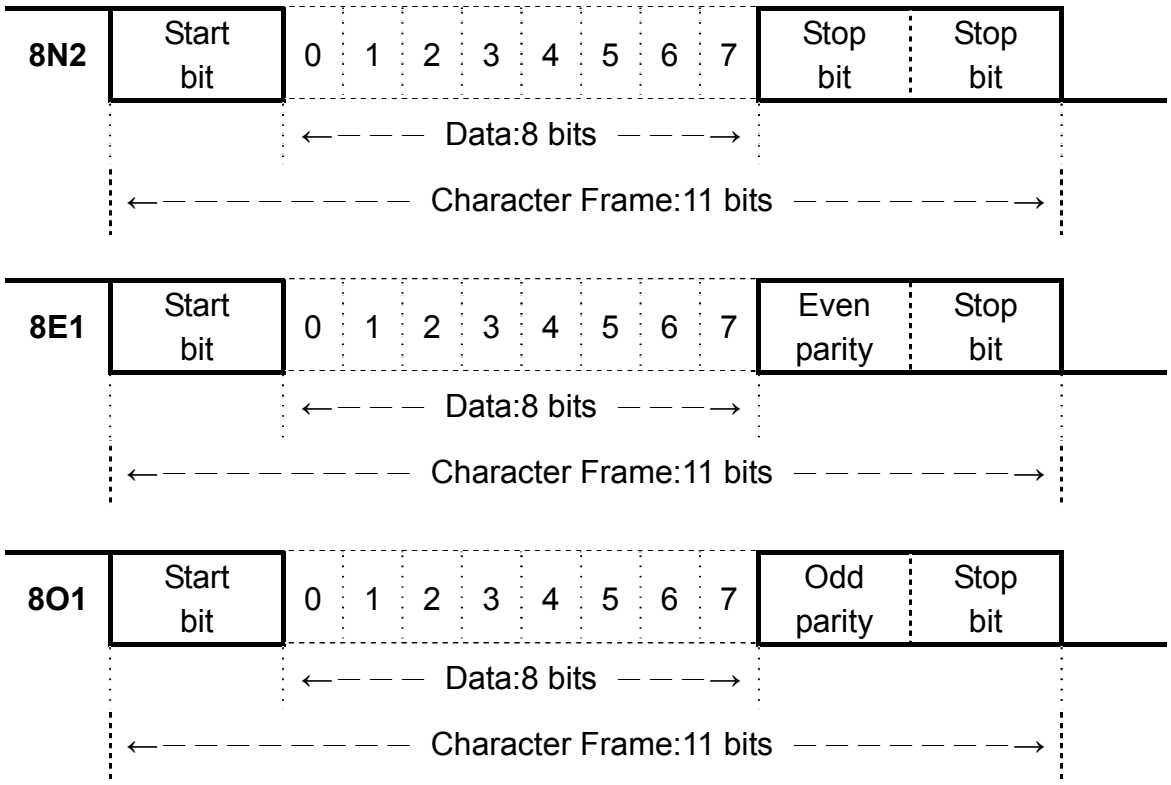

ASCII Mode Framing

Symbol	Name	Description
STX	Comm. start	3AH, Char ':'
ADR	Slave address	Include 2 ASCII code within 1-byte Comm. add : 1 ~ 254 convert to Hex representation ; Ex. Servo drive ADR is No.20 convert to 14H ; ADR = '1' , '4' → '1' = 31H , '4' = 34H
CMD	Function code	Include 2 ASCII code within 1-byte **Function codes:** 03H: Read the register contents, 06H：Write Single Register , 08H：Diagnostic function, 10H：Write Multipile Registers
DATA(n-1) ⎮ DATA(0)	Data	n-word = 2n-byte (ASCII numbers : 4n), n≦30 The format of data is depend on Function code
LRC	Check code	Include 2 ASCII code within 1-byte
END 1	END 1 (CR)	0DH, Char ' \ r '
END 0	END 0 (LF)	0AH, Char ' \ n '

RTU Mode

Symbol	Name	Description
STX	Comm. start	Excess comm. loss time setting 10ms
ADR	Slave address	1-byte Comm. address : 1 ~ 254, convert to Hex representation ; Ex. Comm. address = 20 convert representation to 14 Hex, ADR = '14H'
CMD	Function code	1-byte **Function codes:** 03H: Read the register contents, 06H：Write Single Register , 08H: Diagnostic function, 10H：Write Multipile Registers
DATA(n-1) ⎮ DATA(0)	Data	n-word = 2n-byte, n≦30 The format of data is depend on Function code
CRC-Low	Checking code-LO	1-byte
CRC-High	Checking code-HI	1-byte
END 0	End 0	Excess comm. loss time setting 10ms

Common function codes

03H : Read the register contents

Continuous read N words. * Largest number of N is 29 (1DH)

Ex.: Read two words (register 0200H and 0201H) from Slave address 01H.

ASCII Mode

Query PC → Servo

STX		' : '
ADR		' 0 '
		' 1 '
CMD		' 0 '
		' 3 '
Register ADD.	(Hi)	' 0 '
		' 2 '
	(Lo)	' 0 '
		' 0 '
Data length (word)		' 0 '
		' 0 '
		' 0 '
		' 2 '
LRC		' F '
		' 8 '
END1 (CR)		(0DH)
END0 (LF)		(0AH)

Response Servo → PC OK)

STX		' : '
ADR		' 0 '
		' 1 '
CMD		' 0 '
		' 3 '
Data length (byte)		' 0 '
		' 4 '
Data of 0200H	(Hi)	' 0 '
		' 0 '
	(Lo)	' B '
		' 1 '
Data of 0201H	(Hi)	' 1 '
		' F '
	(Lo)	' 4 '
		' 0 '
LRC		' E '
		' 8 '
END1 (CR)		(0DH)
END0 (LF)		(0AH)

Servo → PC (ERROR)

STX	' : '
ADR	' 0 '
	' 1 '
CMD	' 8 '
	' 3 '
Exception code	' 0 '
	' 2 '
LRC	' 7 '
	' A '
END1 (CR)	(0DH)
END0 (LF)	(0AH)

RTU Mode

Query PC → Servo

ADR		01H
Function Code		03H
Register ADD	(Hi)	02H
	(Lo)	00H
Data length (word)		00H
		02H
CRC(Lo)		04H
CRC(Hi)		07H

Response Servo →PC (OK)

ADR		01H
Function Code		03H
Data (Byte)		04H
Data of 0200H	(Hi)	00H
	(Lo)	BAH
Data of 0201H	(Hi)	1FH
	(Lo)	40H
CRC(Lo)		A3H
CRC(Hi)		D4H

Servo → PC (ERROR)

ADR	01H
Function Code	83H
Exception	02H
CRC(Lo)	C0H
CRC(Hi)	F1H

06H : Write Single Register

Write a word into register.

Ex : Write data (0064H) into register address 0200H and slave ADR= 01

ASCII Mode

Query PC → Servo

STX		' : '
ADR		' 0 '
		' 1 '
CMD		' 0 '
		' 6 '
Register ADD	(Hi)	' 0 '
		' 2 '
	(Lo)	' 0 '
		' 0 '
Write data (word)		' 0 '
		' 0 '
		' 6 '
		' 4 '
LRC		' 9 '
		' 3 '
END1 (CR)		(0DH)
END0 (LF)		(0AH)

Response Servo→PC (OK)

STX		' : '
ADR		' 0 '
		' 1 '
CMD		' 0 '
		' 6 '
Register ADD.	(Hi)	' 0 '
		' 2 '
	(Lo)	' 0 '
		' 0 '
Write data (word)		' 0 '
		' 0 '
		' 6 '
		' 4 '
LRC		' 9 '
		' 3 '
END1 (CR)		(0DH)
END0 (LF)		(0AH)

Servo → PC (ERROR)

STX	' : '
ADR	' 0 '
	' 1 '
CMD	' 8 '
	' 6 '
Exception code	' 0 '
	' 3 '
LRC	' 7 '
	' 6 '
END1 (CR)	(0DH)
END0 (LF)	(0AH)

RTU Mode

Query PC → Servo

ADR		01H
CMD		06H
Register ADD	(Hi)	02H
	(Lo)	00H
Write data (word)		00H
		64H
CRC(Lo)		89H
CRC(Hi)		99H

Response Servo →PC (OK)

ADR		01H
CMD		03H
Register ADD.	(Hi)	02H
	(Lo)	00H
Write data (word)		00H
		64H
CRC(Lo)		89H
CRC(Hi)		99H

Servo → PC (ERROR)

ADR	01H
CMD	86H
Exception code	03H
CRC(Lo)	02H
CRC(Hi)	61H

08H : Diagnostic function

The sub-function code 0000H is able to check communication signal between Master and Slaver. Data content is random value.

Ex: Use the diagnostic function for ID=01H

ASCII Mode

Query PC → Servo

STX		' : '
ADR		' 0 '
		' 1 '
CMD		' 0 '
		' 8 '
Sub-Function	(HI)	' 0 '
		' 0 '
	(Lo)	' 0 '
		' 0 '
Data (word)		' A '
		' 5 '
		' 3 '
		' 7 '
LRC		' 1 '
		' B '
END1 (CR)		(0DH)
END0 (LF)		(0AH)

Response Servo → PC (OK)

STX		' : '
ADR		' 0 '
		' 1 '
CMD		' 0 '
		' 8 '
Sub-Function	(HI)	' 0 '
		' 0 '
	(Lo)	' 0 '
		' 0 '
Data (word)		' A '
		' 5 '
		' 3 '
		' 7 '
LRC		' 1 '
		' B '
END1 (CR)		(0DH)
END0 (LF)		(0AH)

Servo → PC (ERROR)

STX	' : '
ADR	' 0 '
	' 1 '
CMD	' 8 '
	' 8 '
Exception code	' 0 '
	' 3 '
LRC	' 7 '
	' 4 '
END1 (CR)	(0DH)
END0 (LF)	(0AH)

RTU Mode

Query PC → Servo

ADR		01H
CMD		08H
Sub-Function	(HI)	00H
	(Lo)	00H
Data (word)		A5H
		37H
CRC(Lo)		DAH
CRC(Hi)		8DH

Response Servo →PC (OK)

ADR		01H
CMD		08H
Sub-Function	(HI)	00H
	(Lo)	00H
Data (word)		A5H
		37H
CRC(Lo)		DAH
CRC(Hi)		8DH

Servo → PC (ERROR)

ADR	01H
CMD	88H
Exception code	03H
CRC(Lo)	06H
CRC(Hi)	01H

10H : Write Multipile Registers

Continuously write N words to register. * Largest number of N is 27 (1BH)

Ex.: Write data (0064H) and (012CH) into register address 100H and 101H respectively.

ASCII Mode

Query PC → Servo

STX		' : '
ADR		' 0 '
		' 1 '
CMD		' 1 '
		' 0 '
Register ADD	(HI)	' 0 '
		' 1 '
	(Lo)	' 0 '
		' 0 '
Data length (word)		' 0 '
		' 0 '
		' 0 '
		' 2 '
Byte counters (byte)		' 0 '
		' 4 '
ADD. 0100H	(HI)	' 0 '
		' 0 '
	(Lo)	' 6 '
		' 4 '
ADD. 0101H	(HI)	' 0 '
		' 1 '
	(Lo)	' C '
		' 2 '
LRC		' 5 '
		' 7 '
END1 (CR)		(0DH)
END0 (LF)		(0AH)

Response Servo →PC (OK)

STX		' : '
ADR		' 0 '
		' 1 '
CMD		' 1 '
		' 0 '
Register ADD	(HI)	' 0 '
		' 1 '
	(Lo)	' 0 '
		' 0 '
Data length (word)		' 0 '
		' 0 '
		' 0 '
		' 2 '
LRC		' E '
		' C '
END1 (CR)		(0DH)
END0 (LF)		(0AH)

Servo → PC (ERROR)

STX	' : '
ADR	' 0 '
	' 1 '
CMD	' 9 '
	' 0 '
Exception code	' 0 '
	' 2 '
LRC	' 6 '
	' D '
END1 (CR)	(0DH)
END0 (LF)	(0AH)

RTU Mode

Query PC → Servo

ADR		01H
CMD		10H
Register ADD	(HI)	01H
	(Lo)	00H
Data length (word)		00H
		02H
Byte counters		04H
Data 0100H	(HI)	00H
	(Lo)	64H
Data 0101H	(HI)	01H
	(Lo)	2CH
CRC(Lo)		BFH
CRC(Hi)		ADH

Response Servo →PC (OK)

ADR		01H
CMD		10H
Register ADD	(HI)	01H
	(Lo)	00H
Data length (word)		00H
		02H
CRC(Lo)		40H
CRC(Hi)		34H

Servo → PC (ERROR)

ADR	01H
CMD	90H
Exception code	02H
CRC(Lo)	CDH
CRC(Hi)	C1H

LRC (ASCII Mode) and CRC (RTU Mode) Check methods

LRC Checking:

ASCII Mode LRC (Longitudinal Redundancy Check) checking method

The LRC is calculated by adding together successive 8–bit bytes of the message, discarding any carries.

Ex. add ADR, Function code, register address and data contents together, if it get the sum 19DH then discard carrier ”1” and find two’s complement for 9DH to obtain LRC code.

Ex: Execute diagnostic function for Servo drive ID =01H

STX		‘ : ’
ADR		‘ 0 ’
		‘ 1 ’
CMD		‘ 0 ’
		‘ 8 ’
Sub-function	(HI)	‘ 0 ’
		‘ 0 ’
	(Lo)	‘ 0 ’
		‘ 0 ’

Data (word)	‘ A ’
	‘ 5 ’
	‘ 3 ’
	‘ 7 ’
LRC	‘ 1 ’
	‘ B ’
END1 (CR)	(0DH)
END0 (LF)	(0AH)

01H+08H+00H+00H+A5H+37H = E5H

Two’s complement for E5H is 1BH ; derive LRC code: ‘ 1 ’ , ‘ B ’

CRC Checking:

CRC check code is from Slave Address to end of the data. The calculation method is illustrated as follow:

(1) Load a 16-bit register with FFFF hex (all1's). Call this the CRC register.

(2) Exclusive OR the first 8-bit byte of the message with the low-order byte of the 16-bit CRC register, putting the result in the CRC register.

(3) Shift the CRC register one bit to the right (toward the LSB), Zero-filling the MSB, Extract and examines the LSB.

(4) (If the LSB was 0): Repeat Steps (3) (another shift) (If the LSB was 1): Exclusive OR the CRC register with the polynomial value A001 hex (1010 0000 0000 0001).

(5) Repeat Steps (3) and (4) until 8 shifts been performed. When this is done, a complete 8-bit byte will be processed.

(6) Repeat Steps (2) through (5) for next 8-bit byte of the message, Continue doing this until all bytes have been processed. The final content of the CRC register is the CRC value.

Placing the CRC into the message:

When the 16-bit CRC (2 8-bit bytes) is transmitted in the message, the low-order byte will be transmitted first, followed by the high-order byte, For example, if the CRC value is 1241 hex, the CRC-16 (Low) put the 41h, the CRC-16 (Hi) put the 12h.

Example:

An example of a C language function performing CRC generation is shown on the following pages. All of the possible CRC values are preloaded into two arrays, which are simply indexed as the function increments through the message buffer. One array contains all of the 256 possible CRC values for the high byte of the 16-bit CRC field, and the other array contains all of the values for the low byte.

Indexing the CRC in this way provides faster execution than would be achieved by calculating a new CRC value with each new character from the message buffer.

Note

This function performs the swapping of the high/low CRC bytes internally. The bytes are already swapped in the CRC value that is returned from the function.

Therefore the CRC value returned from the function can be directly placed into the message for transmission.

The function takes two arguments:

unsigned char *puchMsg ;	A pointer to the message buffer containing binary data to be used for generating the CRC
unsigned short usDataLen ;	The quantity of bytes in the message buffer.

The function returns the CRC as a type unsigned short.

CRC Generation Function

```
unsigned short CRC16(puchMsg, usDataLen)
unsigned char *puchMsg ;                    /* message to calculate CRC upon*/
unsigned short usDataLen ;                  /* quantity of bytes in message*/
{
unsigned char uchCRCHi = 0xFF ;             /* high byte of CRC initialized*/
unsigned char uchCRCLo = 0xFF ;             /* low byte of CRC initialized*/
unsigned uIndex ;                           /* will index into CRC lookup table*/

while (usDataLen--)                         /* pass through message buffer
{
uIndex = uchCRCHi ^ *puchMsgg++ ;           /* calculate the CRC*/
uchCRCHi = uchCRCLo ^ auchCRCHi[uIndex} ;
uchCRCLo = auchCRCLo[uIndex] ;
}
return (uchCRCHi << 8 | uchCRCLo) ;
}
```

High-Order Byte Table

```
/* Table of CRC values for high-order byte */

static unsigned char auchCRCHi[] = {
0x00, 0xC1, 0x81, 0x40, 0x01, 0xC0, 0x80, 0x41, 0x01, 0xC0, 0x80, 0x41, 0x00, 0xC1, 0x81,
0x40, 0x01, 0xC0, 0x80, 0x41, 0x00, 0xC1, 0x81, 0x40, 0x00, 0xC1, 0x81, 0x40, 0x01, 0xC0,
0x80, 0x41, 0x01, 0xC0, 0x80, 0x41, 0x00, 0xC1, 0x81, 0x40, 0x00, 0xC1, 0x81, 0x40, 0x01,
0xC0, 0x80, 0x41, 0x00, 0xC1, 0x81, 0x40, 0x01, 0xC0, 0x80, 0x41, 0x01, 0xC0, 0x80, 0x41,
0x00, 0xC1, 0x81, 0x40, 0x01, 0xC0, 0x80, 0x41, 0x00, 0xC1, 0x81, 0x40, 0x00, 0xC1, 0x81,
0x40, 0x01, 0xC0, 0x80, 0x41, 0x00, 0xC1, 0x81, 0x40, 0x01, 0xC0, 0x80, 0x41, 0x01, 0xC0,
0x80, 0x41, 0x00, 0xC1, 0x81, 0x40, 0x00, 0xC1, 0x81, 0x40, 0x01, 0xC0, 0x80, 0x41, 0x01,
0xC0, 0x80, 0x41, 0x00, 0xC1, 0x81, 0x40, 0x01, 0xC0, 0x80, 0x41, 0x00, 0xC1, 0x81, 0x40,
0x00, 0xC1, 0x81, 0x40, 0x01, 0xC0, 0x80, 0x41, 0x01, 0xC0, 0x80, 0x41, 0x00, 0xC1, 0x81,
0x40, 0x00, 0xC1, 0x81, 0x40, 0x01, 0xC0, 0x80, 0x41, 0x00, 0xC1, 0x81, 0x40, 0x01, 0xC0,
0x80, 0x41, 0x01, 0xC0, 0x80, 0x41, 0x00, 0xC1, 0x81, 0x40, 0x00, 0xC1, 0x81, 0x40, 0x01,
0xC0, 0x80, 0x41, 0x01, 0xC0, 0x80, 0x41, 0x00, 0xC1, 0x81, 0x40, 0x01, 0xC0, 0x80, 0x41,
0x00, 0xC1, 0x81, 0x40, 0x00, 0xC1, 0x81, 0x40, 0x01, 0xC0, 0x80, 0x41, 0x00, 0xC1, 0x81,
0x40, 0x01, 0xC0, 0x80, 0x41, 0x01, 0xC0, 0x80, 0x41, 0x00, 0xC1, 0x81, 0x40, 0x01, 0xC0,
0x80, 0x41, 0x00, 0xC1, 0x81, 0x40, 0x00, 0xC1, 0x81, 0x40, 0x01, 0xC0, 0x80, 0x41, 0x01,
0xC0, 0x80, 0x41, 0x00, 0xC1, 0x81, 0x40, 0x00, 0xC1, 0x81, 0x40, 0x01, 0xC0, 0x80, 0x41,
0x00, 0xC1, 0x81, 0x40, 0x01, 0xC0, 0x80, 0x41, 0x01, 0xC0, 0x80, 0x41, 0x00, 0xC1, 0x81,
0x40
} ;
```

Low-Order Byte Table

```
/* Table of CRC values for low-order byte */

static char auchCRCLo[] = {
0x00, 0xC0, 0xC1, 0x01, 0xC3, 0x03, 0x02, 0xC2, 0xC6, 0x06, 0x07, 0xC7, 0x05, 0xC5, 0xC4,
0x04, 0xCC, 0x0C, 0x0D, 0xCD, 0x0F, 0xCF, 0xCE, 0x0E, 0x0A, 0xCA, 0xCB, 0x0B, 0xC9, 0x09,
0x08, 0xC8, 0xD8, 0x18, 0x19, 0xD9, 0x1B, 0xDB, 0xDA, 0x1A, 0x1E, 0xDE, 0xDF, 0x1F, 0xDD,
0x1D, 0x1C, 0xDC, 0x14, 0xD4, 0xD5, 0x15, 0xD7, 0x17, 0x16, 0xD6, 0xD2, 0x12, 0x13, 0xD3,
0x11, 0xD1, 0xD0, 0x10, 0xF0, 0x30, 0x31, 0xF1, 0x33, 0xF3, 0xF2, 0x32, 0x36, 0xF6, 0xF7,
0x37, 0xF5, 0x35, 0x34, 0xF4, 0x3C, 0xFC, 0xFD, 0x3D, 0xFF, 0x3F, 0x3E, 0xFE, 0xFA, 0x3A,
0x3B, 0xFB, 0x39, 0xF9, 0xF8, 0x38, 0x28, 0xE8, 0xE9, 0x29, 0xEB, 0x2B, 0x2A, 0xEA, 0xEE,
0x2E, 0x2F, 0xEF, 0x2D, 0xED, 0xEC, 0x2C, 0xE4, 0x24, 0x25, 0xE5, 0x27, 0xE7, 0xE6, 0x26,
0x22, 0xE2, 0xE3, 0x23, 0xE1, 0x21, 0x20, 0xE0, 0xA0, 0x60, 0x61, 0xA1, 0x63, 0xA3, 0xA2,
0x62, 0x66, 0xA6, 0xA7, 0x67, 0xA5, 0x65, 0x64, 0xA4, 0x6C, 0xAC, 0xAD, 0x6D, 0xAF, 0x6F,
0x6E, 0xAE, 0xAA, 0x6A, 0x6B, 0xAB, 0x69, 0xA9, 0xA8, 0x68, 0x78, 0xB8, 0xB9, 0x79, 0xBB,
0x7B, 0x7A, 0xBA, 0xBE, 0x7E, 0x7F, 0xBF, 0x7D, 0xBD, 0xBC, 0x7C, 0xB4, 0x74, 0x75, 0xB5,
0x77, 0xB7, 0xB6, 0x76, 0x72, 0xB2, 0xB3, 0x73, 0xB1, 0x71, 0x70, 0xB0, 0x50, 0x90, 0x91,
0x51, 0x93, 0x53, 0x52, 0x92, 0x96, 0x56, 0x57, 0x97, 0x55, 0x95, 0x94, 0x54, 0x9C, 0x5C,
0x5D, 0x9D, 0x5F, 0x9F, 0x9E, 0x5E, 0x5A, 0x9A, 0x9B, 0x5B, 0x99, 0x59, 0x58, 0x98, 0x88,
0x48, 0x49, 0x89, 0x4B, 0x8B, 0x8A, 0x4A, 0x4E, 0x8E, 0x8F, 0x4F, 0x8D, 0x4D, 0x4C, 0x8C,
0x44, 0x84, 0x85, 0x45, 0x87, 0x47, 0x46, 0x86, 0x82, 0x42, 0x43, 0x83, 0x41, 0x81, 0x80,
0x40
} ;
```

Exception Codes

When communication error occur , servo drive is returned with an error code and Function code+80H return to the ModBus host controller.

Code	Name	Description
01	ILLEGAL FUNCTION	The function code received in the query is not an allowable action for the server (or slave).
02	ILLEGAL DATA ADD.	The data address received in the query is not an allowable address for the server (or slave).
03	ILLEGAL DATA VALUE	A value contained in the query data field is not an allowable value for server (or slave).
04	SLAVE DEVICE FAILURE	An unrecoverable error occurred while the server (or slave) was attempting to perform the requested action.
05	RTU CHECK FAILURE	RTU mode: CRC check error
06	ASCII CHECK FAILURE	ASCII mode: LRC check error or no end code(CRLF)

7-2 Communication address table

All parameters allow to write data by communication excluding display parameters.

System parameters

Address		Parameter	Name of parameter
RS485	RS232		
0001	510H	Cn001	Control Mode
0002	51DH	Cn002	DI Contacts function and Auto tunning
0003	511H	Cn003	Output time setting for Mechanical Brake Signal
0004	512H	Cn004	Motor rotation direction
0005	513H	Cn005	Encoder pulse output scale
0006	514H	Cn006	Reserve parameter
0007	515H	Cn007	Value for Speed reached
0008	516H	Cn008	Brake Modes
0009	517H	Cn009	CW/CCW Drive inhibit
000A	518H	Cn010	CCW Torque command limit
000B	519H	Cn011	CW Torque command limit
000C	51AH	Cn012	Power setting for external Re-generation resistor
000D	5DEH	Cn013	Frequency of Notch Filter (Resonance Filter)
000E	5DFH	Cn014	Band Width of the Resonance Filter.
000F	58FH	Cn015	Gain selection.
0010	5F8H	Cn016	PI/P control switch Mode (Torque Command)
0011	5F9H	Cn017	PI/P control switch Mode (Speed Command)
0012	5FAH	Cn018	Switch-condition in PI/P mode (accelerate Command)
0013	5FBH	Cn019	PI/P control switch Mode (position error number)
0014	53CH	Cn020	Automatic Gain 1 & 2 switch delay time
0015	53DH	Cn021	Automatic Gain 1 & 2 switch condition (Torque command)
0016	53EH	Cn022	Automatic Gain 1 & 2 switch condition (Speed Command)
0017	53FH	Cn023	Automatic Gain 1 & 2 switch condition (Acceleration Command)
0018	540H	Cn024	Automatic Gain 1 & 2 switch condition (Position error value)
0019	587H	Cn025	Load-Inertia ratio
001A	5D0H	Cn026	Rigidity Setting
001B	58BH	Cn027	Reserve parameter
001C	58CH	Cn028	Reserve parameter
001D	5FDH	Cn029	Reset Parameter
001E	50BH	Cn030	Servo motor model code
001F	50EH	Cn031	Cooling fan running mode
0020	546H	Cn032	Speed feed-back smoothing filter
0021	51EH	Cn033	Speed Feed-forward smoothing filter
0022	5B8H	Cn034	Torque command smoothing filter
0023	541H	Cn035	Panel display content selection
0024	51BH	Cn036	Servo ID number
Address		Parameter	Name of parameter
RS485	RS232		

0025	544H	Cn037	Braud rate setting for (Modbus RS-485 / PC Software RS-232)
0026	545H	Cn038	Communication protocol selection
0027	567H	Cn039	Communication time-out dection time
0028	579H	Cn040	Communication response delay time

Torque control parameters

Address		Parameter	Name of parameter
RS485	RS232		
0101	520H	Tn101	Linear acceleration/deceleration method selection
0102	523H	Tn102	Linear acceleration/deceleration time period
0103	521H	Tn103	Analog Torque Command Ratio
0104	522H	Tn104	Analog torque command offset
0105	526H	Tn105	Internal Speed Limit 1
0106	527H	Tn106	Internal Speed Limit 2
0107	528H	Tn107	Internal Speed Limit 3
0108	5CDH	Tn108	Torque output monitor value

Speed control parameters

Address		Parameter	Name of parameter
RS485	RS232		
0201	536H	Sn201	Internal Speed Command 1
0202	537H	Sn202	Internal Speed Command 2
0203	538H	Sn203	Internal Speed Command 3
0204	529H	Sn204	Zero Speed preset selection
0205	52AH	Sn205	Speed command acceleration / deceleration methods
0206	52BH	Sn206	Speed command Smooth acceleration/deceleration-time constant
0207	52CH	Sn207	Speed command Linear acceleration/deceleration time constant
0208	52DH	Sn208	S curve speed command acceleration and deceleration time setting
0209	52EH	Sn209	S curve speed command acceleration time setting
020A	52FH	Sn210	S curve speed command deceleration time setting
020B	530H	Sn211	Speed loop Gain 1
020C	531H	Sn212	Speed-loop Integral time constant 1
020D	53AH	Sn213	Speed loop Gain 2
020E	53BH	Sn214	Speed loop Integral time constant 2
020F	532H	Sn215	Value of zero speed
Address		Parameter	Name of parameter
RS485	RS232		
0210	533H	Sn216	Analog Speed Command Ratio
0211	534H	Sn217	Analog Speed Command offset adjust

0212	599H	Sn218	Analog Speed Command Limit

Position control parameters

Address		Parameter	Name of parameter
RS485	RS232		
0301H	550H	Pn301	Position command selection (for pulse type、logic and drive inhizibit)
0302H	560H	Pn302	Electronic Gear Ratio Numerator 1
0303H	561H	Pn303	Electronic Gear Ratio Numerator 2
0304H	562H	Pn304	Electronic Gear Ratio Numerator 3
0305H	563H	Pn305	Electronic Gear Ratio Numerator 4
0306H	554H	Pn306	Electronic Gear Ratio Denominator
0307H	552H,553H	Pn307	Position complete value
0308H	556H,557H	Pn308	Position error band upper limit
0309H	558H,559H	Pn309	Position error band lower limit
030AH	55AH	Pn310	Position Loop Gain 1
030BH	551H	Pn311	Position Loop Gain 2
030CH	55BH	Pn312	Position Loop Feed Forward Gain
030DH	55CH	Pn313	Position command Smooth Accel/Decel time constant
030EH	55DH	Pn314	Position Command Direction definition
030FH	51FH	Pn315	Position Pulse error clear mode
0310H	50DH	Pn316	Internal Position Command Mode
0311H	568H	Pn317	Internal Position Command 1-Rotation Number
0312H	569H	Pn318	Internal Position Command 1-Pulse Number
0313H	56AH	Pn319	Internal Position Command 1-Move Speed
0314H	56BH	Pn320	Internal Position Command 2-Rotation number
0315H	56CH	Pn321	Internal Position Command 2-Pulse Number
0316H	56DH	Pn322	Internal Position Command 2-Move Speed
0317H	56EH	Pn323	Internal Position Command 3-Rotation number
0318H	56FH	Pn324	Internal Position Command 3-Pulse Number
0319H	575H	Pn325	Internal Position Command 3-Moving Speed
031AH	576H	Pn326	Internal Position Command 4-Rotation number
031BH	577H	Pn327	Internal Position Command 4-Pulse Number
031CH	578H	Pn328	Internal Position Command 4-Move Speed
031DH	59CH	Pn329	Internal Position Command 5-Rotation Number
031EH	59DH	Pn330	Internal Position Command 5-Pulse Number

Address		Parameter	Name of parameter
RS485	RS232		
031FH	59EH	Pn331	Internal Position Command 5- Move Speed
0320	59FH	Pn332	Internal Position Command 6-Rotation Number
0321	5A0H	Pn333	Internal Position Command 6-Pulse Number
0322	5A1H	Pn334	Internal Position Command 6- Move Speed

0323	5A2H	Pn335	Internal Position Command 7-Rotation Number
0324	5A3H	Pn336	Internal Position Command 7-Pulse Number
0325	5A4H	Pn337	Internal Position Command 7- Move Speed
0326	5A5H	Pn338	Internal Position Command 8-Rotation Number
0327	5A6H	Pn339	Internal Position Command 8-Pulse Number
0328	5A7H	Pn340	Internal Position Command 8- Move Speed
0329	5A8H	Pn341	Internal Position Command 9-Rotation Number
032A	5A9H	Pn342	Internal Position Command 9-Pulse Number
032B	5AAH	Pn343	Internal Position Command 9- Move Speed
032C	5ABH	Pn344	Internal Position Command 10-Rotation Number
032D	5ACH	Pn345	Internal Position Command 10-Pulse Number
032E	5ADH	Pn346	Internal Position Command 10-Move Speed
032F	5AEH	Pn347	Internal Position Command 11-Rotation Number
0330	5AFH	Pn348	Internal Position Command 11-Pulse Number
0331	5B3H	Pn349	Internal Position Command 11-Move Speed
0332	5E0H	Pn350	Internal Position Command 12-Rotation Number
0333	5E1H	Pn351	Internal Position Command 12-Pulse Number
0334	5E3H	Pn352	Internal Position Command 12-Move Speed
0335	5E4H	Pn353	Internal Position Command 13-Rotation Number
0336	5E5H	Pn354	Internal Position Command 13- Pulse Number
0337	5E6H	Pn355	Internal Position Command 13- Move Speed
0338	5E7H	Pn356	Internal Position Command 14-Rotation Number
0339	5E8H	Pn357	Internal Position Command 14- Pulse Number
033A	5E9H	Pn358	Internal Position Command 14- Move Speed
033B	5EAH	Pn359	Internal Position Command 15-Rotation Number
033C	5EBH	Pn360	Internal Position Command 15- Pulse Number
033D	5ECH	Pn361	Internal Position Command 15- Move Speed
033E	5EDH	Pn362	Internal Position Command 16- Rotation Number
033F	5EEH	Pn363	Internal Position Command 16- Pulse Number
0340	5EFH	Pn364	Internal Position Command 16-Move Speed
0341	54AH	Pn365	Setting for HOME routine
0342	54BH	Pn366	1 st preset speed of HOME (high speed)
0343	54CH	Pn367	2 nd preset speed of HOME (low speed)
0344	54DH	Pn368	HOME Position Offset. (No of Revolutions)
0345	54EH	Pn369	HOME – Bias Pulse value (No of pulses)

Quick Setup parameters

Address		Parameter	Name of parameter
RS485	RS232		
0401	530H	qn401	Speed Loop Gain 1
0402	531H	qn402	Integral Time constant for Speed Loop 1
0403	53AH	qn403	Speed Loop Gain 2
0404	53BH	qn404	Integral Time constant for Speed Loop 2

0405	55AH	qn405	Position Loop Gain 1
0406	551H	qn406	Position Loop Gain 2
0407	55BH	qn407	Position Loop Feed-Forward Gain

Multi-function programmable contact parameter

Address		Parameter	Name of parameter
RS485	RS232		
0501	5C0H	Hn501	DI-1 Pragrammable digital inupt Selection
0502	5C1H	Hn502	DI-2 Pragrammable digital inupt Selection
0503	5C2H	Hn503	DI-3 Pragrammable digital inupt Selection
0504	5C3H	Hn504	DI-4 Pragrammable digital inupt Selection
0505	5C4H	Hn505	DI-5 Pragrammable digital inupt Selection
0506	5C5H	Hn506	DI-6 Pragrammable digital inupt Selection
0507	5C6H	Hn507	DO-1 Programmable Digital Output Selection
0508	5C7H	Hn508	DO-2 Programmable Digital Output Selection
0509	5C8H	Hn509	DO-3 Programmable Digital Output Selection
050A	5C9H	Hn510	Digital input control method selection
050B	5CAH	Hn511	Setting digital input status in communication mode

Display parameters

Address		Parameter	Name of parameter
RS485	RS232		
0601	6E4H	Un-01	Actual Motor Speed
0602	9B6H	Un-02	Actual Motor Torque
0603	691H	Un-03	Regenerative load rate
0604	693H	Un-04	Accumulated load rate
0605	694H	Un-05	Max load rate
0606	678H	Un-06	Speed Command
0607	65CH	Un-07	Position Error Value
0608	688H	Un-08	Position Feed-back Value
0609	632H	Un-09	ExternalVoltage Command
060A	6B7H	Un-10	(Vdc Bus) Main Loop Voltage
060B	695H	Un-11	External Spped Limit Command Value
060C	6C0H	Un-12	External CCW Torque Limit Command Value
060D	6C1H	Un-13	External CW Torque Limit Command Value
060E	8BBH	Un-14	Motor feed back – Rotation value (absolute value)
060F	8BAH	Un-15	Motor feed back – Less then one rotation pulse value(absolute value)
0610	8C5H	Un-16	Pulse command – rotation value(absolute value)
0611	8C4H	Un-17	Pulse Command-Pulse value less than one rotation(Absolute value)
0612	67EH	Un-18	Torque command
0613	844H	Un-19	Load inertia ratio

Chapter 8 Troubleshooting

8-1 Alarm functions

The Alarm codes are displayed in a format such as that shown below. For any Alarm messages , refer to this section for identify the cause and dispel the error. to reset the Alarm message by following pages description. If this is not possible for any reason then contact your local supplier for assistance.

Alarm Status Display：

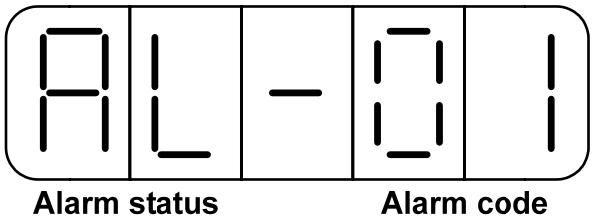

For Alarm List refer to the section 8-2. In the example above AL-01 indicate (Under Voltage)
There is also an Alarm history which can record ten entry of alarm record.
History record is listed as alarm history record table shows.

Alarm History Record

Display	Explanation
AL –xx	The Latest Alarm.
A1 – xx	Previous First Alarm.
A2 – xx	Previous Second. Alarm.
A3 – xx	Previous Third Alarm.
A4 – xx	Previous Fourth Alarm.
A5 – xx	Previous Fifth Alarm.
A6 – xx	Previous Sixth Alarm.
A7 – xx	Previous Seventh Alarm.
A8 – xx	Previous Eighth Alarm.
A9 – xx	Previous Ninth Alarm.

Note：xx is denotation of the Alarm Codes.

Example:

Following table are procedures to access the alarm history record parameter.

Steps	Key	LED Display	Procedures
1	Turn On the Power	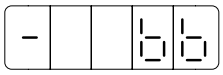	On" power on " **Drive Status** parameter is displayed.
2		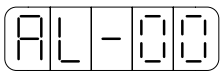	Press **MODE key** to enter the Alarm History record.
3		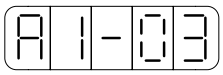	Press ▲ **Key** to view the Alarm 1 message that previously happened and the alarm code is "03" (Overload)
4		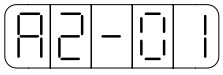	Press ▲ **Key** again to view Alarm 2 message and repeat this to see entire alarm history list. In this example Alarm code is 01. (Under voltage)
5		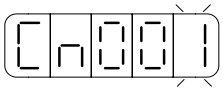	Press MODE **MODE key** once to view System Parameters. Repeat this to select all other available parameters.

8-2 Troubleshooting of Alarm and Warning

Alarm Code	Alarm Name and Description	Corrective Actions	Reset Method
00	**Normal**	—	—
01	**Under-voltage** The main circuit voltage is below its minimum specified value. (190Vac)	Use multi-meter to check whether the input voltage is within the specified limit. If it can not be solved, there may be failure inside the Drive.	Turn ALRS(DI) ON
02	**Over-voltage (Regeneration error)** 1. The main circuit voltage is exceeded maximum allowable value. (410V) 2. Regeneration voltage is too high.	1. Use multi-meter to check whether the input voltage is within the specified limit. 2. Check the Parameter **Cn012** if it is setting correctly. 3. If this alarm appears during operation. Extend ac/deceleration time or reduce load ratio in the permitted range. Otherwise, an external regeneration resistor is needed. (Please contact your supplier for assistance.)	Turn ALRS(DI) ON
03	**Motor Over-load** The drive has exceeded its rated load during continuous operation. When the loading is equal to 2 times of rated loading, alarm occurs within 10sec.	1. Check connection for Motor terminal s (U,V,W) and Encoder. 2. Adjust the Drive gain, If gain is not correctly adjusted, it would cause motor vibration and large current will lead to motor over load. 3. Extend acc/deceleration time or reduce load ratio in the permitted range.	Turn ALRS(DI) ON
04	**Drive Over-current Transistor error** Drive main circuit Over current or Transistor error.	1. Check connection of the motor cable (U,V,W) and encoder. Check power cable connection. Refer to the diagram in Chapter 2. 2. Turn off the power, and turn on again after 30 min. If the alarm still exists, there may be power module malfunction or noise consider the drive for test and repair.	Reset Power Supply
05	**Encoder ABZ phase signal error** Motor's encoder failure or encoder connection problem.	1. Check the motor's encoder connections. 2. Check the encoder if short circuit, poor solder joints or break. 3. Check the encoder signal terminals CN2-4 and CN2-5 (power cable 5V)	Reset Power Supply
06	**Communication error** Communication protocol setting error or Communication time-out is detected.	1. Check parameter setting of communication function. 2. Check wire connection between drive and controller. 3. Set a correct value for parameter Cn039 communication time-out or set "0 " to disable communication time-out function.	Reset Power Supply
07	**Multi-function contact setting error** Input/output contacts function setting error.	1. Check parameters Hn501~Hn506 trigger level selected by 2nd digit of Hn 501 to 506should be the same for all inputs **DI-1~DI-6** 2. Check parameters setting of **Hn507~Hn509** should NOT be the same for outputs contact **DO-1~DO-3**	Reset Power Supply
08	**Memory Error** Parameter write-in error	Disconnect all command cable then re-cycle the power. If alarm still occurs, it means the Drive was failure.	Reset Power Supply

Alarm Code	Alarm Name and Description	Corrective Actions	Reset Method
09	**Emergency Stop** When the input contact point EMC is activated. Alarm 09 appears.	1. Disable Emergency stop signal input. 2. Internal mal-function. Ensure that all connection are correct, refer to Chapter 2 Power and motor circuit diagrams connection. Control wiring diagrams.	Turn ALRS(DI) ON
10	**Motor over-current** Motor current is 4 times greater than rated current.	1.Check if the motor wiring U,V,W)and encoder wiring correct or not. 2.Internal interference and mal-function. Ensure that all connection are correct ,refer to Chapter 2 Power and motor circuit diagrams.	Turn ALRS(DI) ON
11	**Position error** The deviation between Pulse command and encoder feed back (position error) is greater than the setting of **Pn308** or **Pn309**.	1. Increase the position loop gain (**Pn310** and **Pn311**) setting value. 2. Increase in position tolerance value by (**Pn312** for a better motor response. 3. Extend the time of ac/deceleration or reduce load inertia in the permitted range. 4. Check if the motor wiring (U,V,W) is correct.	Turn ALRS (DI) ON
12	**Motor over speed** Motor's speed is 1.5 times more then motor's rated speed.	1. Reduce the speed command. 2. Electronic gear ratio is incorrect check and set correctly. 3. Adjust speed loop gains **(Sn211** & **Sn213**) for a better motor response.	Turn ALRS (DI) ON
13	**CPU Error** Control system Mal-function.	Turn off the power. Turn on again after 30 min. If error alarm still exists, this may be due to external interference. Refer to the chapter 2 Motor, power cable and control signals connections.	Reset Power Supply
14	**Drive disable** When input contacts **CCWL** & **CWL** are operated at the same time this alarm occurs.	1. Remove input contact signal **CCWL** or **CWL.** 2. Check all input wiring for correct connections.	Turn ALRS (DI) ON
15	**Drive overheat** Power transistor temperature exceed 90°C.	Over-load for a long duration will cause driver overheat, check and reset operation system.	Turn ALRS (DI) ON

Alarm Reset Methods

1. carry out the suggestions below to reset Alarm.

(a) **Reset by input signal:** Once the cause of Alarm is rectified,
disable **SON** signal (Switch off Servo ON), then activate input signal **ALRS.**
Alarm condition should be cleared and the drive will be ready for operation.
Reference 5-6-1 for setting SON and Alarm signal.

(b) **Reset from Keypad :** Once the cause of Alarm is rectified,
disable **SON** signal (Switch off Servo ON), then press the buttons and at the same time to reset Alarm and the drive will be ready for operation.

2. **Power reset**: Once the cause of Alarm is rectified, disable **SON** signal (Switch off Servo ON) and re-cycling power.
Alarm condition can be reset and the drive will be ready for operation.

Waning!

1) **Before applying power rest , ensure that SON is off (SON signal is removed first) to prevent danger.**
2) **Ensure that the speed commands are removed before the alarm is reset, otherwise the motor may run abruptly once the alarm signal is reset.**

Chapter 9 Specifications

9-1 Specifications and Dimension for Servo Drives

Servo motor for JSDE-□□□□		10A	15A	20A	30A
Available Servo Motor (Applicable Motor Models) TSC/TSB/TST-□□□□		TSC04051	TSC06401	TSC06401	TSC08751
		TSC04101	TST06401	TSC08751	TSC08751
		—	TSB07301	TST06401	TSB13102A
		—	—	TSB08751	TSB13102B
		—	—	TSB13551A	TSC13102C
		—	—	TSB13551H	TSB13102H
Servo motor capacity [KW] Max.		0.2	0.4	0.8	1.0
Continuous output current [A rms]		1.8	3.5	4.4	5.16
Max. output current [A rms]		5.4	10.5	13.2	15.50
Input Power Supply	Main Circuit R/S/T	Single/Three Phase 170 ~ 253Vac			
		50/60Hz ±5%			
Cooling System		Natural Air Cooling		Fan Cooling	
Control of Main Circuit		Three-phase full-wave rectification IGBT- SVPWM Control			
Resolution of Encoder Feedback		Incremental type: 2000ppr / 2500ppr			
Panel and operation key		5 digital seven-segment display ; four function key.			
Control Mode		Position(Pulse input), Position (Internal control), Speed, Torque, Position/Speed, Speed/Torque, Position/Torque,			
Regeneration Brake		Builted-in (brake Transistor and brake resistor)			
Protection Function		Undervoltage, Over Voltage, Overload, Overcurrent, decoder abnormal, Multi-function contact setting error, Memory abnormal, Emergency Stop, Position error, Overspeed, CPU Error, Drive disable, Drive Overheat			
Communication interface		RS-232 / RS- 485 (Modbus protocol)			

Position Control Mode	Command Source		External Pulse Control / 16-Stage internal register control
	Input Pulse	Type	Positive/Negative Edge Trigger Type : CW/CCW, CLK+DIR, A Phase + B Phase
		Waveform	Line Driver(+5V), Open Collector
		Max. Frequency	500 KHz(Line Driver) / 200 KHz(Open Collector)
	Electronice Gear		1/200≦ A/B ≦200 (A=1~50000, B=1~50000)
	Position Smoothing Constant (Input Ripple Filtering)		Ripple Time Constant 0~10sec (Time Constant 0~10 sec)
	Final Position Tolerance (In Position)		0~50000 Pulse
	Torque Limit Operation		0 ~ 100 %
	Feed Forward Compensation		Set by Parameters
Speed Control Mode	Command Source		External Analog Command / 3-Stage internal Parameters
	Analog voltage input range		±10Vdc / 0~ Rated Speed
	Input Impedance		Approx.10k ohm
	Speed Control Range		1 : 5000(Internal speed control) / 1 : 2000(External analog voltage control)
	Speed fluctuation Rate		-0.03% or less at Load fluctuation 0 to 100% (at Rated Speed) 0.2% or less at power fluctuation ±10% (at Rated Speed) 0.5% or less at ambient temperature fluctuation 0 deg C to 50 deg C (at Rated Speed)
	Zero Speed Command		Set by Parameters 0~3000rpm
	Limit of Speed up or down		Line and speed up or down, time constant 0~50sec, smoothing time constant 0~10sec
	Speed Reached		Set by Parameters 0~3000rpm
	Torque Limit		External Analog Command /Set by Parameters
	Frequency Response Characteristic		Max. 300Hz (when JL=JM)

Torque Control Mode	Voltage Command		0~±10Vdc / 0~±300%
	Input Impedance		10K ohm
	Torque Time Constant		Time Constant 0~50sec
	Speed limit		External Analog Command / Set by Parameters
	Torque Reached Command		0 ~ 300% (Set by Parameters)
Digital	Position Output	Output Type	A, B, Z Line Drive Output/ Phase Z Open Collector
		Encoder Ratio	1 ~ 63 Encoder Ratio (Set by Parameters)
	DI[NPN/ PNP] Input	Optional Input To 6 ports	Servo ON, P/PI switching, inhibit forward/reverse drive, error pulse clear, servo lock, Emergency stop, internal speed choice, run mode switching, inhibit position command, gain switching, electronic gear ratio setting, internal position command choice, internal position command trigger, internal position command pause, original point positioning, return to original point, external torque limit, control model switching, forward/reverse switching, internal speedsetting, inhibit pulse command
	DO Output	Optional Input to 3 ports	Servo Motor Warning, Servo Ready, Zero Speed, Positioning Completed, Speed Reach, Brake interlock, Home Completed
Environ-ment	Altitude		Sea level 1000m below
	Install Location		Indoor (avoiding direct sunshine) no erosion air (avoiding oil gases, inflammable gas and dust)
	Temperature		Operating Temperature 0~ 55°C, storage Temperature: -20 ~ +85°C
	Humidity		Operating, storage below 90% RH
	Vibration		10 ~ 57Hz : 20m/s2, 57 ~ 150Hz : 2G

***Momentary Max. torque is 240% of rate torque for TSTE series.**

※ Dimension for TSTE-10 and TSTE-15

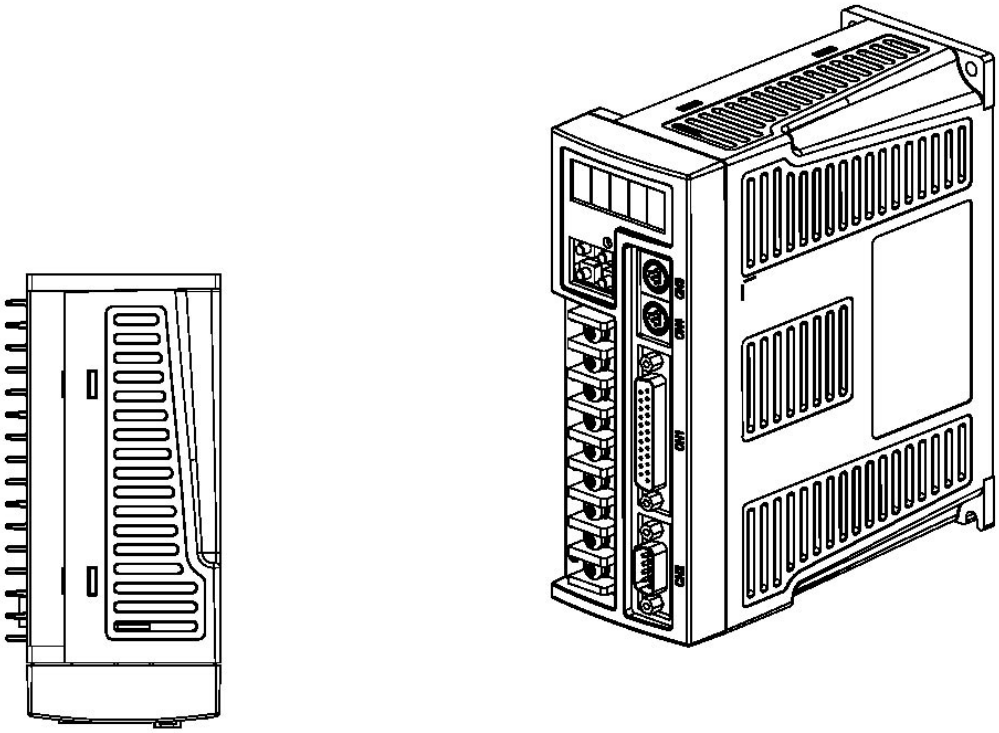

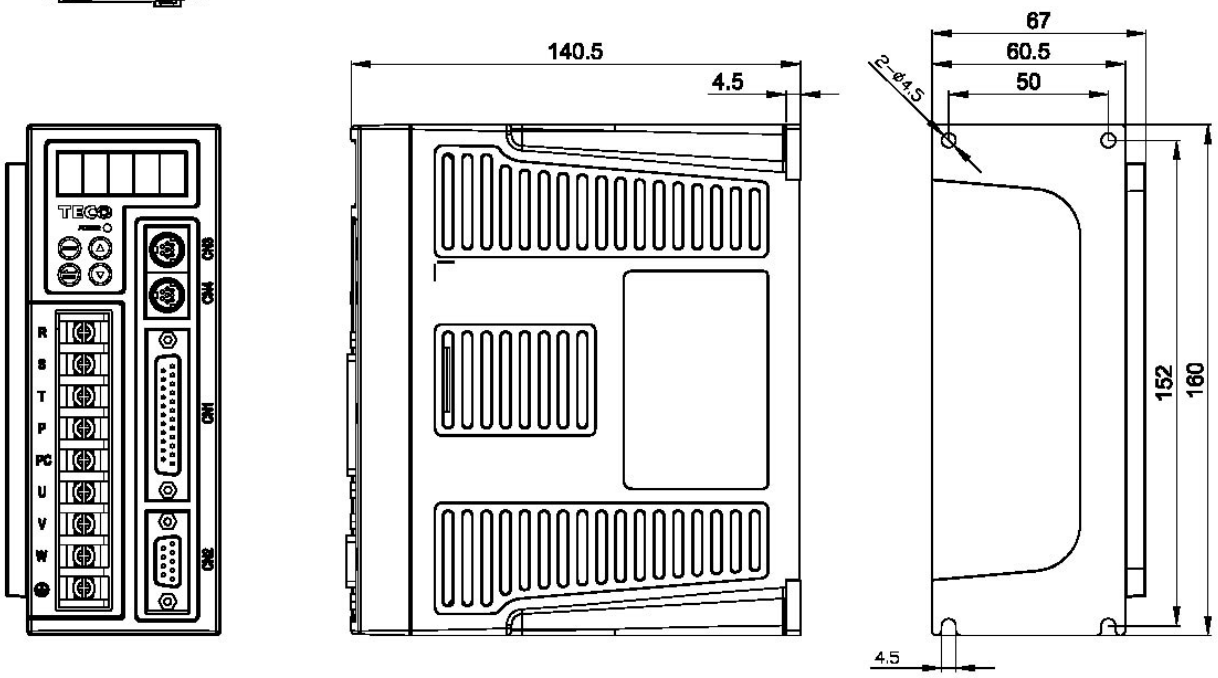

※ Dimension for TSTE-20 and TSTE-30

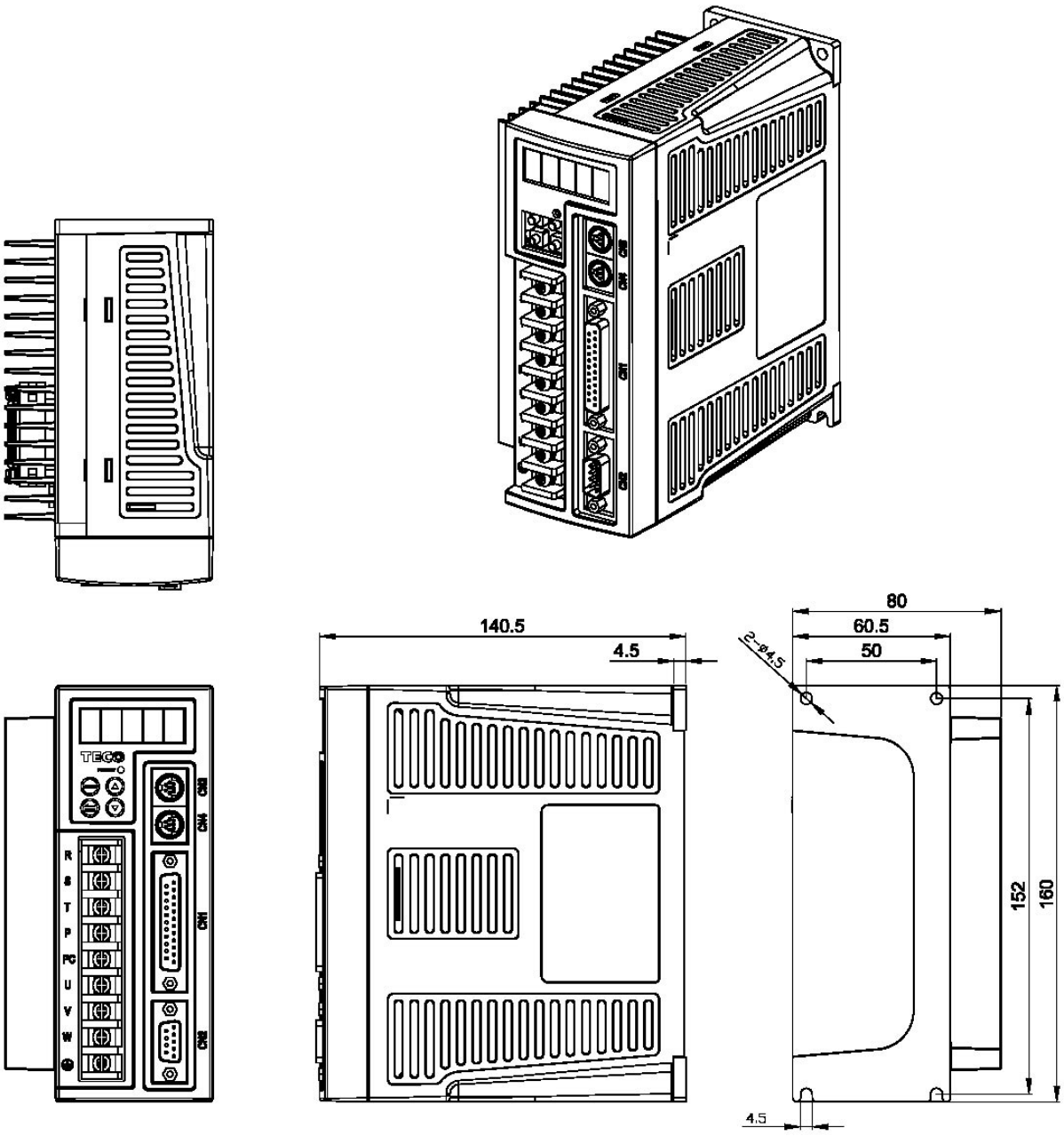

TSB 07/08 SERIES

SPECIFICATION

1（kgf · cm）＝0.0980665（N · m） 1（gf · cm · s^2）＝0.980665（kg · cm^2）

Item / Motor Type			Unit	TSB07301C	TSB08751C
Rated Output		PR	W	300	750
Driver Set				TSTA15C	TSTA20C
Rated Terminal Voltage		VT	V	107.7	149.4
Rated Torque		TR	N · m	0.95	2.391
Rated Current		IR	A	2.0	3.4
Rated Speed		NR	rpm	3000	3000
Peak Torque		TP（N）	N · m	2.861	7.164
Peak Current		IP	A	6.0	10.2
Torque Constant		KT	N · m/A	0.524	0.776
Voltage Constant		KE	V/k rpm	54.9	81.4
Rotor Intertia		JM	kg · cm^2	0.6773	2.459
Resistance		Ra	Ω	8.37	3.27
Inductance		La	mH	17.4	10.2
Mechanical Time Constant		Tm	ms	1.96	1.032
Electrical Time Constant		te	ms	2.05	3.12
Weight			kgf	1.82	3.41
Insulation Class				F class（155℃）	
BRAKE	Rated Voltage		V	VDC 24V ±10%	
	Static Rubbing Torque			N · m	1.176	2.352
	Inertia			kg · cm^2	0.098	0.225
	Consume Current			A	0.45	0.44
	Weight			kgf	0.68	1.94
Ambient Temperature				℃	0~40	

● To customize motors, please contact with us or our agent.

TSB 07/08 SERIES

DIMENSION

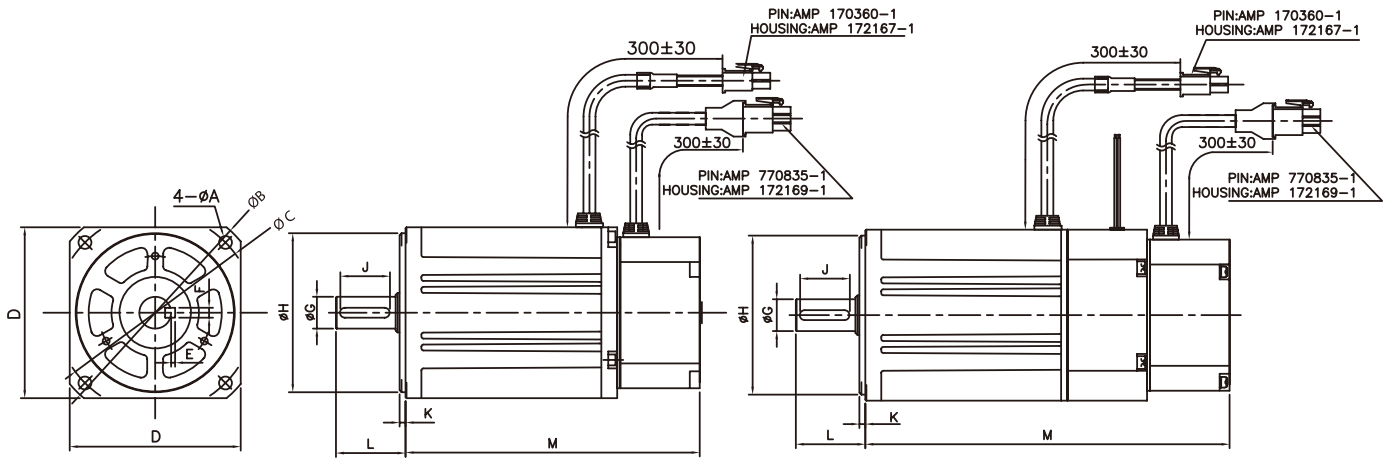

	Motor Type	A	B	C	D	E	F	G	H	J	K	L	M
With Brake	TSB07301C	ϕ5.5	ϕ100	ϕ90	76	2	5	ϕ14	ϕ70	20	3	30	147.8
	TSB08751C	ϕ6.5	ϕ112	ϕ100	86	2	5	ϕ16	ϕ80	25	3	35	183.2
Non Brake	TSB07301C	ϕ5.5	ϕ100	ϕ90	76	2	5	ϕ14	ϕ70	20	3	30	113.5
	TSB08751C	ϕ6.5	ϕ112	ϕ100	86	2	5	ϕ16	ϕ80	25	3	35	148

TSB 13 SERIES

SPECIFICATION

1（kgf · cm）=0.0980665（N · m） 1（gf · cm · s^2）=0.980665（kg · cm^2）

Item / Motor Type			Unit	TSB13551A	TSB13102A	TSB13102B	TSB13152A
Rated Output		PR	W	550	1000	1000	1500
Driver Set				TSTA20C	TSTA30C	TSTA30C	TSTA50D
Rated Terminal Voltage		VT	V	162.3	188.7	185.3	194.4
Rated Torque		TR	N · m	5.252	9.545	4.782	14.327
Rated Current		IR	A	3.43	5.16	5.16	7.45
Rated Speed		NR	rpm	1000	1000	2000	1000
Peak Torque		TP（N）	N · m	15.758	28.645	14.327	42.963
Peak Current		IP	A	10.3	15.5	15.5	22.35
Torque Constant		KT	N · m/A	1.679	2.039	1.019	2.26
Voltage Constant		KE	V/k rpm	175.9	213.6	106.8	236.6
Rotor Intertia		JM	kg · cm^2	6.26	12.14	6.26	17.92
Resistance		Ra	Ω	5.37	2.78	1.82	1.785
Inductance		La	mH	27.5	18.21	10.05	12.66
Mechanical Time Constant		Tm	ms	1.21	0.82	1.11	0.454
Electrical Time Constant		te	ms	5.12	6.55	5.52	7.092
Weight			kgf	6.47	10.16	6.47	13.87
Insulation Class				B class（130℃）			
BRAKE	Rated Voltage		V	VDC 24V ±10%			
	Static Rubbing Torque		N · m	15	15	15	15
	Inertia		kg · cm^2	0.725	0.725	0.725	0.725
	Consume Current		A	1	1	1	1
	Weight		kgf	1.7	1.7	1.7	1.7
Ambient Temperature			℃	0~40			

● To customize motors, please contact with us or our agent.

TSB 13 SERIES

SPECIFICATION

1（kgf · cm）=0.0980665（N · m） 1（gf · cm · s^2）=0.980665（kg · cm^2）

Item / Motor Type			Unit	TSB13152C	TSB13202B	TSB13302B	TSB13302C
Rated Output		P_R	W	1500	2000	3000	3000
Driver Set				TSTA50D	TSTA50D	TSTA75D	TSTA75D
Rated Terminal Voltage		V_T	V	200.3	205.4	189.4	199.7
Rated Torque		T_R	N · m	4.782	9.545	14.327	9.545
Rated Current		I_R	A	7.06	9.18	14	14
Rated Speed		N_R	rpm	3000	2000	2000	3000
Peak Torque		T_P（N）	N · m	14.327	28.645	42.963	28.645
Peak Current		I_P	A	21.2	27.5	42	42
Torque Constant		K_T	N · m/A	0.74	1.139	1.13	0.75
Voltage Constant		K_E	V/k rpm	77.5	119.4	118.3	78.5
Inertia		J_M	kg · cm^2	6.26	12.14	17.92	12.14
Resistance		Ra	Ω	0.98	0.86	0.5	0.37
Inductance		La	mH	5.37	5.67	3.54	2.43
Mechanical Time Constant		Tm	ms	1.14	0.81	0.71	0.81
Electrical Time Constant		te	ms	5.48	6.59	7.08	6.57
Weight			kgf	6.47	10.16	13.87	10.16
Insulation Class				B class（130℃）			
BRAKE	Rated Voltage		V	VDC 24V ±10%			
	Static Rubbing Torque		N · m	15	15	15	15
	Inertia		kg · cm^2	0.725	0.725	0.725	0.725
	Consume Current		A	1	1	1	1
	Weight		kgf	1.7	1.7	1.7	1.7
Ambient Temperature			℃	0~40			

● To customize motors, please contact with us or our agent.

DIMENSION

	With Brake	Without Brake
Motor Type	L（mm）	L（mm）
TSB13551A	219.3	164.8
TSB13102A	269.3	214.8
TSB13152A	319.3	264.8
TSB13102B	219.3	164.8
TSB13202B	269.3	214.8
TSB13302B	319.3	264.8
TSB13152C	219.3	164.8
TSB13302C	269.3	214.8

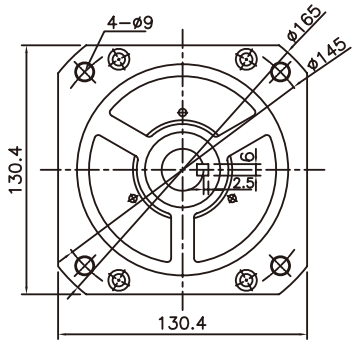

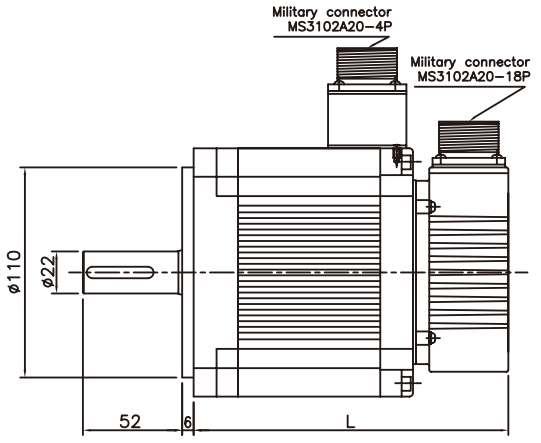

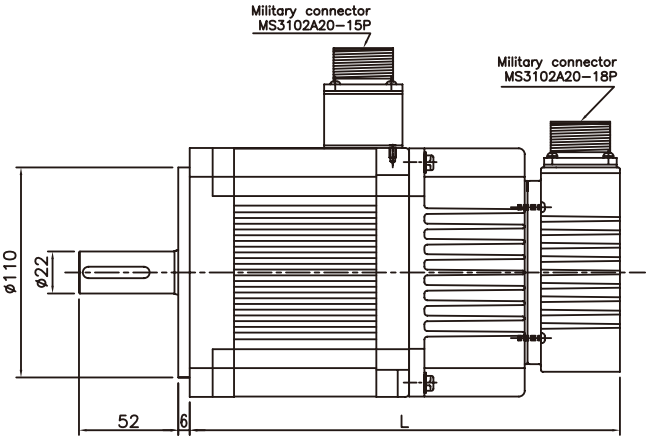

TSC 04/06/08 SERIES

SPECIFICATION

1（kgf · cm）=0.0980665（N · m）　1（gf · cm · s^2）=0.980665（kg · cm^2）

Item / Motor Type		Unit	TSC04051C	TSC04101C	TSC06401C	TSC08751C
Rated Output	P_R	W	50	100	400	750
Driver Set			TSTE10	TSTE10C/TSTA15C	TSTA20C	TSTA30C
Rated Terminal Voltage	V_T	V	114.96	148.7	77.53	98.18
Rated Torque	T_R	N · m	0.16	0.32	1.274	2.48
Rated Current	I_R	A	0.65	0.94	3.5	3.2
Rated Speed	N_R	rpm	3000	3000	3000	3000
Peak Torque	T_P（N）	N · m	0.48	0.96	3.822	7.44
Peak Current	I_P	A	1.95	2.8	10.5	9.6
Torque Constant	K_T	N · m/A	0.356	0.444	0.39	0.815
Voltage Constant	K_E	V/k rpm	34.5	39.3	40.4	82.7
Inertia	J_M	kg · cm^2	0.029	0.036	0.277	0.94
Resistance	Ra	Ω	106.5	37.5	2.94	5.7
Inductance	La	mH	36.45	13.32	5.7	14
Mechanical Time Constant	Tm	ms	2.7	0.831	0.555	0.854
Electrical Time Constant	te	ms	0.34	0.36	1.94	3.68
Weight		kgf	0.48	0.7	1.44	2.476
Insulation Class			B class（130℃）		F class（155℃）	
Ambient Temperature		℃	0~40			

● To customize motors, please contact with us or our agent.

TSC 04/06/08 SERIES

DIMENSION

TSC04

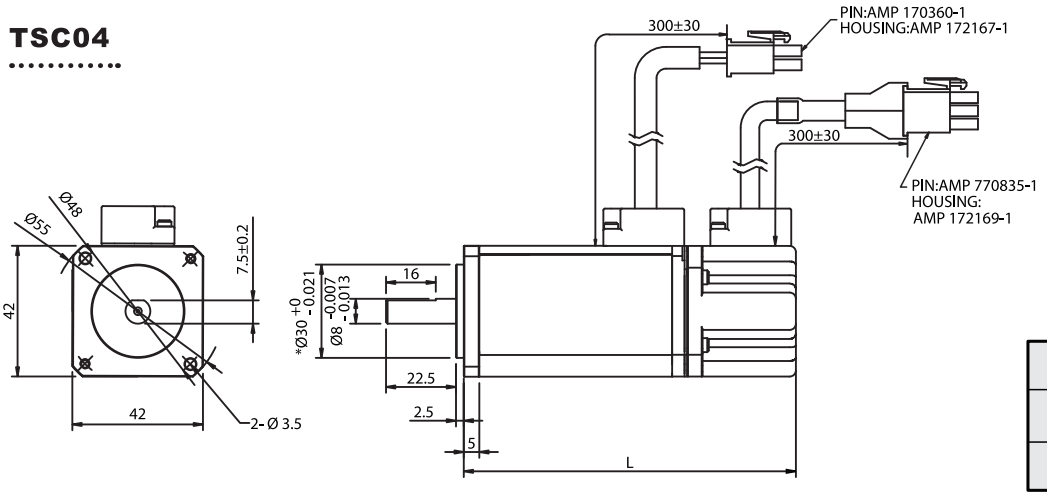

MODEL	L(mm)
TSC04-051C	85.8
TSC04-101C	106.8

TSC06

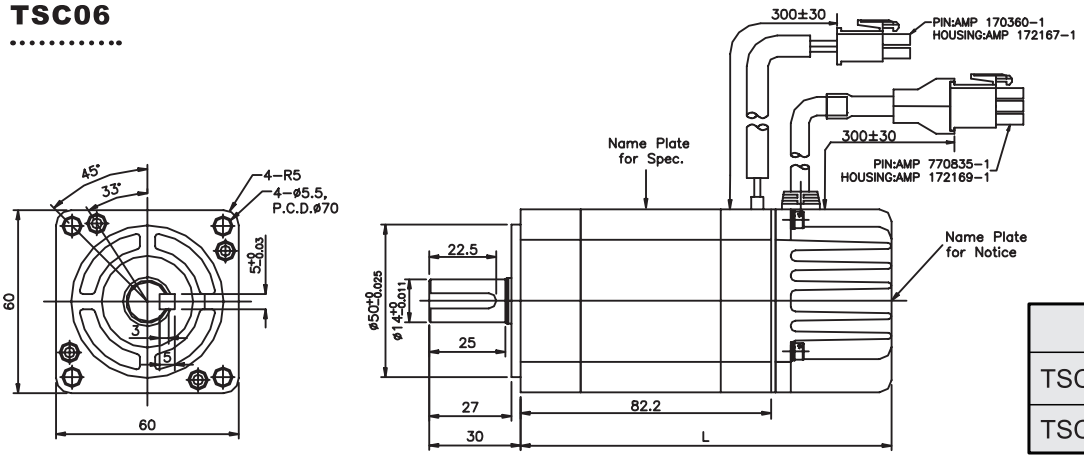

MODEL	L(mm)
TSC06-W/O brake	121.7
TSC06-With brake	157.1

TSC08

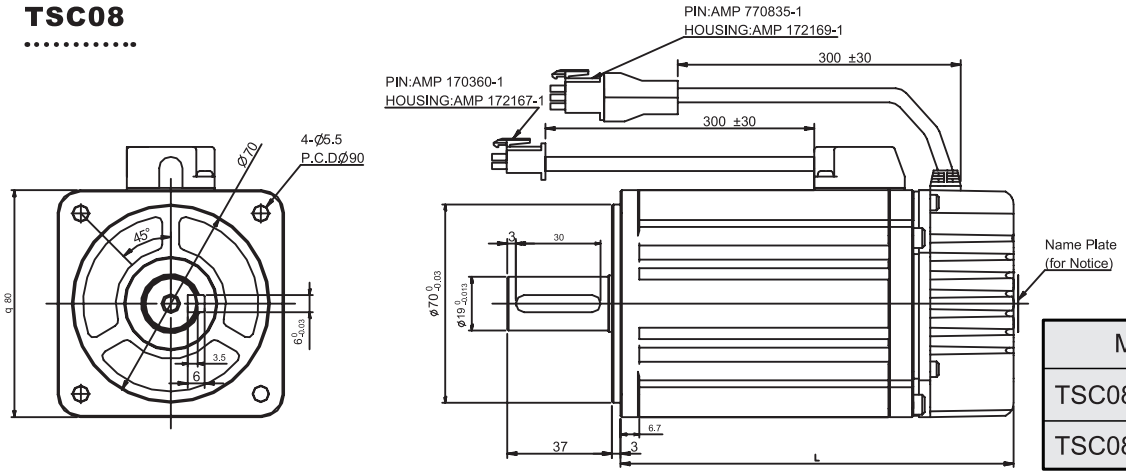

MODEL	L(mm)
TSC08-W/O brake	139
TSC08-With brake	174

Appendix A: Peripheral for Servo motors

Part No.	Description	Model
DTY3FAMPUVW000000	Power Connector + PIN (AMP 4pin)	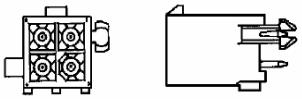
DTY3FAMPP0PG000000	Encoder Connector + PIN (AMP 9pin)	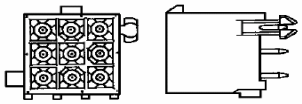
0Y303A3104PS1	Power Connector (MS 4pin)	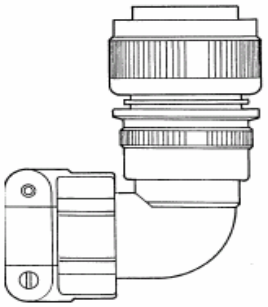
0Y303A3109PS1	Encoder Connector (MS 9pin)	
DTY3CMS06A2004S00	Power Connector (MS 4pin)	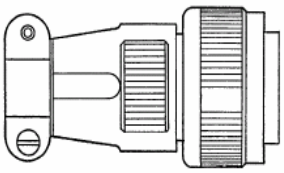
DTY3CMS06A2018S00	Encoder Connector (MS 9 pin)	
DTY3FCB01MUVWCB00	1M Power Cable (AMP)	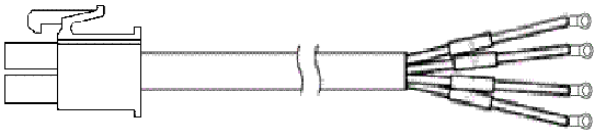
DTY3FCB03MUVWCB00	3M Power Cable (AMP)	
DTY3FCB05MUVWCB00	5M Power Cable (AMP)	
DTY3FCB10MUVWCB00	10M Power Cable (AMP)	
DTY3FCB01M0PGCB00	1M Encoder Cable (AMP+3M)	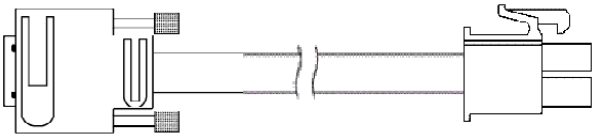
DTY3FCB03M0PGCB00	3M Encoder Cable (AMP+3M)	
DTY3FCB05M0PGCB00	5M Encoder Cable (AMP+3M)	
DTY3FCB10M0PGCB00	10M Encoder Cable (AMP+3M)	

Part No.	Description	Model.
DTY3FCB01MUVWMB00	1M L-type Power Cable (MSL)	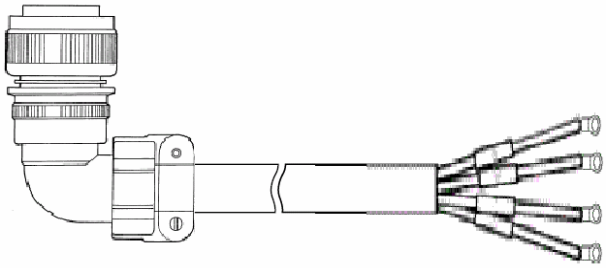
DTY3FCB03MUVWMB00	3M L-type Power Cable (MSL)	
DTY3FCB05MUVWMB00	5M L-type Power Cable (MSL)	
DTY3FCB10MUVWMB00	10M L-type Power Cable (MSL)	
DTY3FCB01M0PGMB00	1M L-type Encoder Cable (MSL+D-SUB)	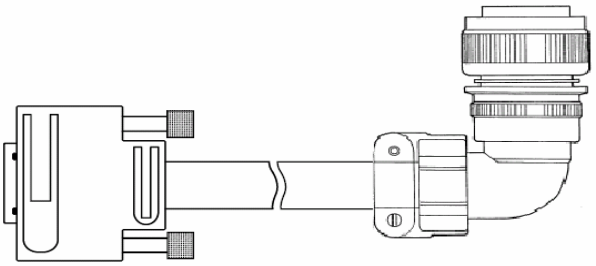
DTY3FCB03M0PGMB00	3M L-type Encoder Cable (MSL+D-SUB)	
DTY3FCB05M0PGMB00	5M L-type Encoder Cable (MSL+D-SUB)	
DTY3FCB10M0PGMB00	10M L-type Encoder Cable (MSL+D-SUB)	

TECO ELECTRO DEVICES CO., LTD.

TEL：886-3-452-5031 FAX：886-3-461-6910
11-1, An Tung Rd., Chung-Li Industrial District,
Taoyuan, Taiwan
http://www.tedmotors.com

TAICANG TECO ELECTRO DEVICES CO., LTD.
No. 1 Dong Yuan Rd, South-Dam Industrial Park,
LiuHe Town. TaiCang City, Jiangsu Province, PRC
TEL：+86-512-53600179 FAX：+86-512-53600173

Version 1, 2009 March