Model:TSB08751C-2NH3-L

No.	Item	Symbol	Unit	Specification
1	Drive	–	–	Retangular Wave
2	Cooling Method	–	–	Totally Enclosed
3	Exciting Method	–	–	Permanent Magnet
4	Resolution	–	–	2500 C/T
5	Rated Output	P_R	W	750
6	Rated Torque	T_R	N–m	2.391
7	Max. Torque	T_{max}	N–m	7.164
8	Rated Speed	N_R	rpm	3000
9	Rated Current	I_R	A	3.4
10	Max. Current	I_{max}	A	10.2
11	Torque Constant	Kt	N–m/A	0.774±10%
12	Back emf(at 1800rpm)	V_{EMF}	Volts	84.6±10%/2ø
13	Roter Inertia	J_M	Kg–cm^2	2.459±10%
14	Rated Power Rate	Q_R	kW/s	23.5
15	Resistance	Ra	Ω	2.18±10%/2ø

No.	Item	Symbol	Unit	Specification
16	Inductance	La	mH	6.8±10%/2ø
17	Mech. Time Constant	Tm	ms	1.036±10%
18	Elect. Time Constant	Te	ms	3.12±10%
19	Insulation Class	–	–	Class F
20	Operation Temp.	T	°C	0~40
21	Operation Humd.	RH	%	<90
22	Storage Temp.	T	°C	–20~60
23	Storage Humd.	RH	%	<90
24	Weight	W	kgw	3.05kg

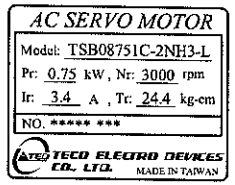

Name Plate for Spec.

Name Plate for Notice

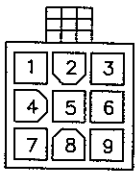

1	+5V	White
2	0V	Black
3	A	Green
4	$\overline{A}$	Blue
5	B	Red
6	$\overline{B}$	Pink
7	Z	Yellow
8	$\overline{Z}$	Orange
9	FG	Shield

Encoder Connection

1	U	Red
2	V	White
3	W	Black
4	GND	Y/G

Motor Connection

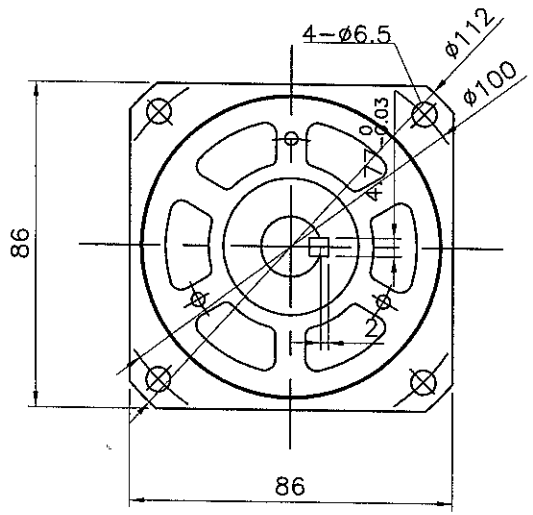

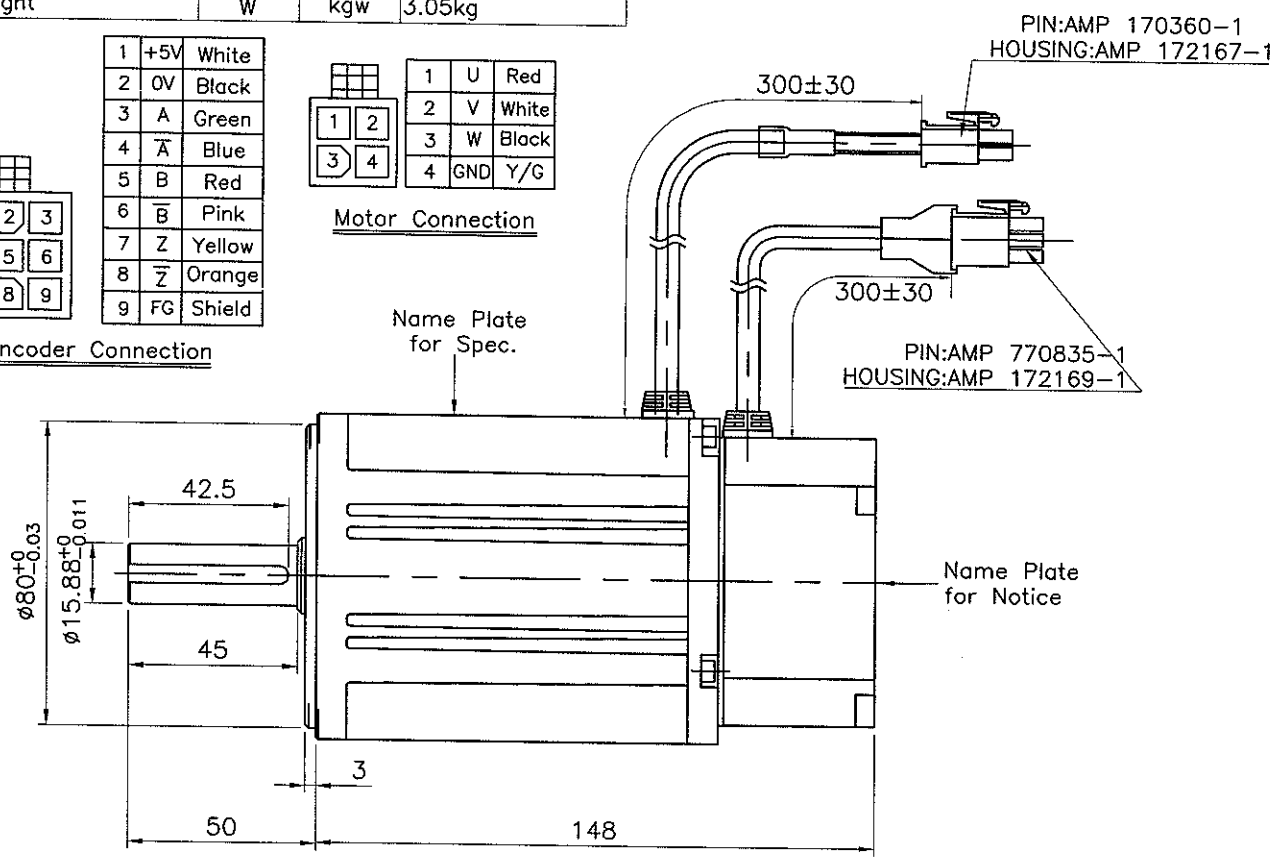

STANDARD TOLERANCE	
X	±0.5
.X	±0.2
.XX	±0.05
ANGLE	±30'

MATERIAL		REV	DESCRIPTION	SIGNATURE	DATE

APVD		
CHKD		
CHKD		
DRN	Michelle	08-25-'09
	SIGNATURE	DATE

SCALE	1/2	UNIT	mm	NAME	Servo Motor Outline Drawing
3RD .A.P				TITLE	TSB08751C–2NH3–L
TECO ELECTRO DEVICES CO., LTD.				Dept. Design	DWG.NO. DTSB08751C2NH30L1